150 YEARS OF CELEBRATING THE MAHATMA

सत्यमेव जयते

स्वच्छ भारत
एक कदम स्वच्छता की ओर

CPWD Manual on
Accessible Built Environment

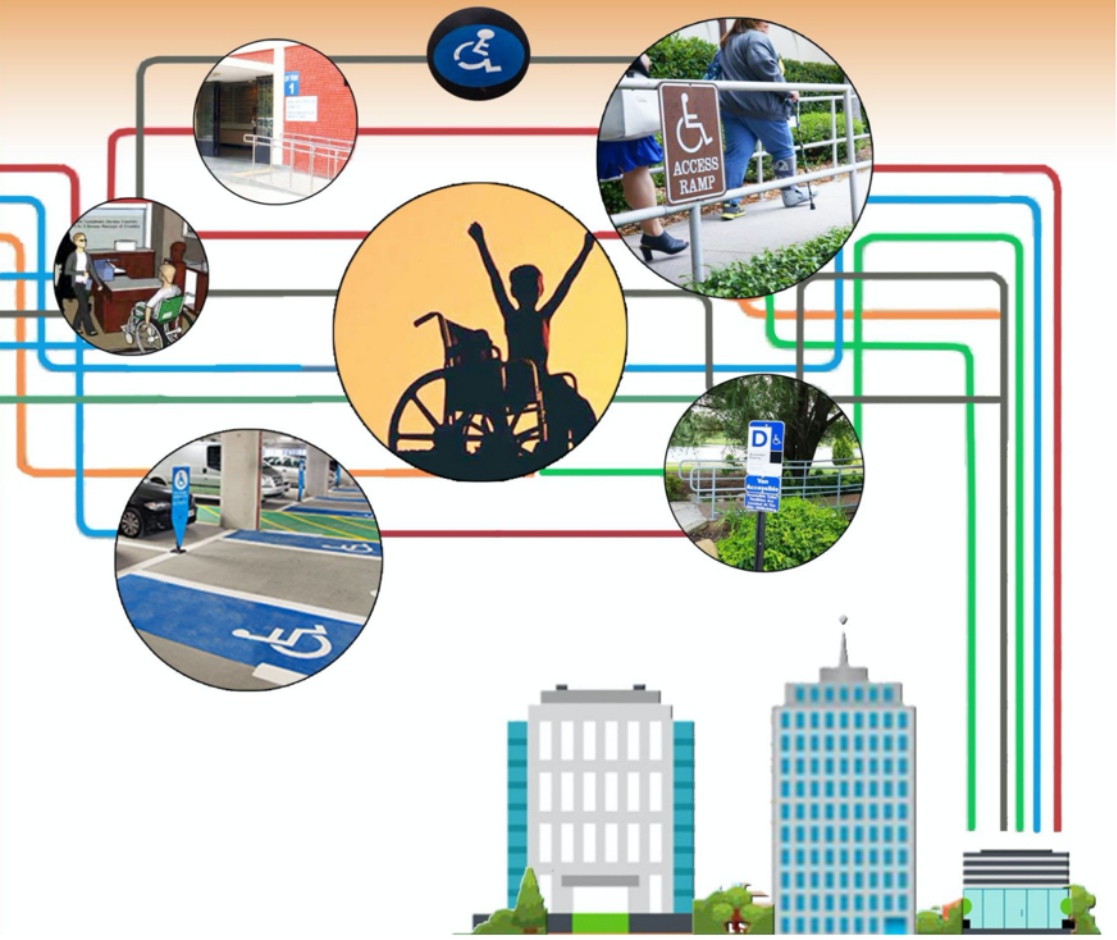

CPWD MANUAL
on
Accessible Built Environment

Director General,
CENTRAL PUBLIC WORKS DEPARTMENT

CPWD MANUAL ON

ACCESSIBLE BUILT ENVIRONMENT

July 2019

Published By:
Director General, CPWD
Nirman Bhawan, New Delhi -110011

Technical Advisory Team: CPWD

Ar. Usha Batra
Special DG (Western Region), CPWD

Er. Dr. K M Soni
Additional DG (Tech), CPWD

Ar. R. K. Kaushal
ADG Region Hyderabad, CPWD

Ar. Indu G. Choudhary
Chief Architect, DDG (E-Gov), CPWD

Ar. Dr. Sonia Mehta
Chief Architect (NDR), CPWD

Er. C .K .Varma
Chief Engineer (E), CSQ, CPWD

Ar. Abhijeet Vardhan
Architect, CPWD

Ar. Neeti
Dy. Architect, CPWD

Ar. Yogendra Pal Singh Yadav
Dy. Architect, CPWD

Ar. Sourodip Lahiri,
Asst. Architect, CPWD

Ar. Gaurav Sarswat,
Asst. Architect, CPWD

Ar. Shahna Shamim
Asst. Architect, CPWD

PRABHAKAR SINGH
Director General

सत्यमेव जयते

भारत सरकार
Government of India

CPWD

केन्द्रीय लोक निर्माण विभाग
निर्माण भवन, नई दिल्ली-110011

Central Public Works Department
Nirman Bhawan, New Delhi-110011
Tel : 23062556/1317, Fax : 23061884
E-mail : cpwd_dgw@nic.in

FOREWORD

Consequent to enactment of the **"The Rights of Persons with Disabilities Act, 2016"**, CPWD was entrusted the mammoth task of making all Central Government Office Buildings barrier free. It was anenormous task but nevertheless an important one exhibiting the commitment of the Government to give effect to the rights of persons with different abilities the free access to all built environment.

CPWD being on the forefront of executing this important initiative of the Government of India faced many challenges particularly in the heritage buildings where implementation of many retrofitting measures was not possible due to the very character of these buildings. In other cases too, carrying out this work was very arduous. CPWD accomplished this task most successfully.

Since the act necessitates the provision of all essential features required to make a building barrier free, the need for Accessibility Manual was strongly felt for incorporating as well as executing the barrier free features in all future buildings to be constructed by CPWD.

I, congratulate the team of officers namely Smt. Usha Batra, Special Director General (WR), Dr. K.M. Soni, ADG (Technical), Shri R.K. Kaushal, ADG (Hyderabad), Shri C.K. Verma, CE (E) CSQ, Dr. Sonia Mehta, CA (NDR), Smt. Indu Gujral Chowdhary, DDG (e-gov.), CPWD for working on the idea of Accessibility Manual of CPWD and converting it into a reality within a very short time.

I hope this manual will be very useful and user friendly not only to CPWD Engineers but also to other executing entities of Central Government, State Government , Central and State PSUs etc.

(Prabhakar Singh)

Place: New Delhi
Dated: July 2019

Dr. K.M. Soni
Additional Director General (Tech)

भारत सरकार
Government of India

Central Public Works Department
Nirman Bhawan, New Delhi

PREFACE

CPWD is continuously working for making the physical environment accessible to all persons having different abilities. The work in this direction was started way back in 1998 when the Department came out with "Guidelines and Space Standards for Barrier Free Built Environment for Disabled and Elderly persons". Further "Handbook on Barrier Free and Accessibility" was brought in 2014 for guidance of field formations. With the emphasis on making every Government Building barrier free in line with the United Nations Convention on the Rights of Persons with Disabilities 2006, it was felt to bring out this Manual.

CPWD has done tremendous work to make General Pool Office buildings barrier free during last 3 years in line with "The Rights of Persons with Disability Act, 2016". The experience so earned by the department has given it the requisite expertise to absorb the nuances of the work of retrofitting along with the application of the provisions of the Act in new construction also. Such exposure, experience and expertise earned have culminated into this Manual which will be very useful for all CPWD Built Constructions.

This manual is the outcome of the work done by Smt. Usha Batra, SDG(WR), Sh. R.K. Kaushal, ADG (Hyderabad), Sh. C.K. Varma, CE(CSQ), Dr. Sonia Mehta, CA(NDR), Smt. Indu Gujral Choudhary, DDG(e-Gov.), Sh. Abhijeet Vardhan, Smt. Neeti, Sh. Yogendra Pal Singh Yadav, Sh. Sourodip Lahiri, Sh. Gaurav Sarwat and Smt. Shahna Shamim.

Any omissions, corrections or suggestions may be brought to the notice of CA (NDR) or CE(E) CSQ for further improvement and incorporation in next version.

(Dr. K. M. Soni)
Addl. DG (Tech)

Place: New Delhi.
Dated: July, 2019.

USHA BATRA
Special Director General (W.R.)
16th Floor, Pratishtha Bhawan,
101, Mharshi Karve Road, Mumbai - 400 020
Tel.: 022-22054946
Email: batra.usha@gov.in

सत्यमेव जयते

उषा बत्रा
विषेश महानिदेशक (प.क्षे.)
केन्द्रीय लोक निर्माण विभाग
16 वी मंजिल, प्रतिष्ठा भवन,
101, महर्षि कर्वे रोड, मुंबई - 400 020
दूरभाष - 022-22054946
ई मेलः batra.usha@gov.in

PROLOGUE

Universally accessible design means planning to build physical, learning and work environment so that the facilities are usable by a wide range of people, regardless of age, size or disability status. While universal design promotes access for individuals with disabilities, it also benefits others. It is legally required to ensure that our work and learning environment are accessible for individuals with disabilities and we understand that accessibility is essential to an inclusive environment.

The Government of India with firm commitment towards socio-economic transformation of the persons with disabilities is making considerable efforts to create mass awareness for universal accessibility. CPWD has already published few books on accessibility but need was felt to publish a manual on accessibility to fulfill the commitment of Government of India and ensure 100% accessible built environment.

It is anticipated that the manual will not only prove useful for CPWD but design professionals, building industry, government organizations and community as a whole will also be benefitted and it will also go a long way in creating awareness about the importance of Barrier Free Built Environment.

Usha Batra

USHA BATRA
Spl.DG.WR, CPWD, Mumbai

"Be the Change you want to see in the world." - Mahatma Gandhi.

PREAMBLE

CPWD is committed to provide Universal Accessibility in its entire built habitat across the country as an important aspect of its sustainable construction practice.

Table of Contents

List of Figures

General Notes

1. In any new construction, the Architect concerned shall ensure that all accessibility provisions are shown in the drawings.
2. Engineer-in-Charge shall be responsible to provide all the accessibility provision as per the architectural drawings and required by building codes during construction.
3. For retrofitting existing building, Engineer-in-Charge shall take advice of the Architect for the same.
4. Sizes, clearances & dimensions given in this Manual shall not be reduced by addition of stone cladding, flooring materials, wall panelling or any other alteration/repair.
5. In case of addition/alteration & repairs, accessibility provisions shall not be covered up changed.
6. In Heritage buildings, where permanent accessibility measures are not feasible, temporary arrangements shall be provided after taking approval of the concerned local authorities.
7. Effective facility management is essential to ensure that accessibility is maintained on an ongoing basis. Access audits shall also be carried out periodically.
8. All accessible provisions provided in the buildings shall be maintained properly and kept in working conditions.
9. Maintenance, housekeeping and operations agencies shall ensure that
   - Wheelchair spaces are available in seating areas.
   - Storage, Planters, bins etc do not obstruct circulation space, WCs or lift call buttons.
   - Staff is sensitised to the issues relating to disabled people including emergency procedures.
   - External routes, including steps and ramps are kept clean, unobstructed and free of surface water, dead leaves, lichen, debris, etc.
   - Cleaning and polishing do not produce a slippery surface.
   - Designated car parking spaces are not being used by non-disabled motorists.
   - Side hung doors accompanying revolving doors shall not be kept locked.
   - Auxiliary aids such as portable ramps etc. are available and are removed when not in use.
   - Any temporary barriers that are used to channel customers to reception or serving points and whose configuration needs to be changed frequently, have a semi – rigid top barrier which contrasts visually with its background.

- Written instructions on the use of sanitary facilities and equipment are displayed beside each item.
- A procedure is in place to respond to alarm calls from toilets and lifts.
- Waterproof mattress covers are available for use in accessible bedrooms in non-domestic buildings.
- Assistance is made available to carry trays where needed in refreshment areas.
- Access between movable tables in refreshment area is provided.

10. In case of discrepancy between this Manual and NBC 2016, the provisions of NBC 2016 shall prevail.

CHAPTER. 1 Accessibility Needs in Built Environment

1.1 INTRODUCTION

The need for providing barrier free environment arose out of the premise of empowerment of persons with disabilities. It is further based on their non-discrimination and inclusion in society with full and effective participation, respect for their inherent dignity, individual autonomy and freedom to make their own choices, respect for their difference and acceptance as part of human diversity and humanity, equality of opportunity and respect for evolving their capacities with disabilities and respect for their rights etc. All these are enumerated in "The Rights of Person with Disability Act 2016"an Act of Parliament of India to give effect to the aforesaid principles arising out of the United Nation's Convention on the rights of persons with Disabilities adopted by United Nations General Assembly in 2006.

Among the various factors defining the barriers in the above mentioned Act, the one which is relevant from the viewpoint of built habitat is the physical environment which hampers the full and effective participation of persons with disabilities either in terms of their employment/ education/ entertainment or needs arising out of their day to day activities like banking, travelling etc.

Disabilities can be broadly classified as: Visual, Hearing, Speech, Locomotors or any combination of these. Further, these can be either partial or total. These can also be either inborn or arising out of old age or due to some accident / ailment which can be temporary or permanent. Accordingly, barrier free physical environment has to be created considering all these aspects of impairment either by retrofitting measures in the existing buildings or by incorporating the required features in new constructions.

The exercise of incorporating the features of accessibility starts right from the approach to the building and continues through the entry to the building, use of the various functional spaces of the building, use of the equipment and facilities of the building, use of the toilet and sanitary facilities in the building , various level differences in the building, using the emergency services of the building for fire evacuation and disaster management and last but not the least to the information dissemination system of the building. This can be effected by way of modifying/providing accessible route, walkways and pathways, accessible parking, Ramp, Handrails, accessible plan at the boundary and entrance, accessible lift, platform and inclined Lifts, corridors, Auditoriums, Conference Rooms, Toilets, Shower Room, signage, emergency egress, lighting both external and internal to the building, furniture, communication system etc.

The needs however, may not stop here but will increase after use of these facilities in already built accessible environment. This aspect can be taken care of when in future arise out of the use of existing requirements of accessibility.

CPWD being the Premier Construction Agency of the Central Government has primarily implemented the provisions of the "RIGHTS OF PERSONS WITH DISABILITIES ACT, 2016" in all Central Govt. Buildings under its maintenance throughout the country under "Sugamya Bharat", a Program of Govt. of India and also in the buildings under its construction as a matter of Govt. policy. Now in its role as Principle Technical Advisor to the Government of India, necessity has been felt to bring out all the requirements of barrier free environment in built habitat as essential features of all

buildings including its approach within its boundaries so as to achieve universal accessibility in its entire built environment.

The RIGHTS OF PERSONS WITH DISABILITIES ACT, 2016 has been provided as annexure "A" of this Manual and can also be accessed from the following URL .

www.disabilityaffairs.gov.in/upload/uploadfiles/files/RPWD%20ACT%202016.pdf

CHAPTER. 2 Site Planning & Development

2.1 Scope

Each building and its site should be planned designed and developed as an integral unit from the concept and design process, taking into account all accessibility provisions required to make the whole premises universally accessible. To achieve this it is essential to understand the conflicts and hazards that may be posed for differently abled people to attain a barrier free holistic environment and incorporate it during design stage.

2.2 Walkways and Pathways

a) General

Walkways and Pathways open to public shall adhere to the accessibility provisions in terms of width, slope, materials, handrails, guarding, drainage, lighting, levels, grooves, gratings and manholes.

b) Width

Width of the Walkways and pathways shall not be less than 1 800 mm for two-way traffic which may be reduced to a minimum of 1 500 mm provided that a passing and turning space of at least 1 800 mm × 2 000 mm should be provided for every 25 m.

c) Slope

Slope shall not have a gradient exceeding 1:20 and shall be free from steps or abrupt level changes. At the edge of change of level, non-slip surface with same material should be used for slope gradient to display same slip resistance characteristics.

d) Material

Walkways and Pathways shall be smooth, and have levelled and hard surface suitable for walking and wheeling free from obstacles. There shall be no gratings and manholes in the walkways/pathways.

e) Handrails

Handrails shall be provided on both sides of the walkways and pathways where there is ramp or level change.

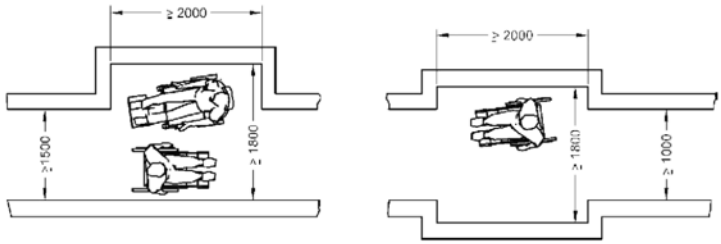

Figure 2.1 PASSING PLACES

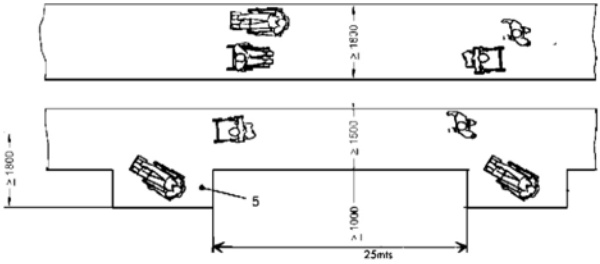

Figure 2.2 SURFACE WIDTHS OF THE PATH

f) Guarding along Path and Ramps

Guarding is to be provided for protection at the side of the path for people who use wheelchairs and ambulant people from injuring themselves as the result of a fall.

- If a level or sloped path is bounded on one or both sides by terrain that slopes downwards by up to 30° from the horizontal, a firm and level margin of at least 600 mm shall be provided at the relevant side or sides.
- If a sloped path or ramp is bounded on one or both sides by terrain that slopes downwards by more than 30°, an upstand of minimum height of 150 mm shall be provided at the relevant side or sides. Upstands shall have a minimum difference in LRV*(Light Reflectance Value) (Refer Chapter 17 Colours) of 30 points in relation to the ramp.
- If a path, or a sloping path, stepped path, ramp, terrace or other unfenced platform rises more than 600 mm above the adjacent ground, it shall be provided with guarding. If the adjacent ground is firm and level with the path for 600 mm, no guard is needed.

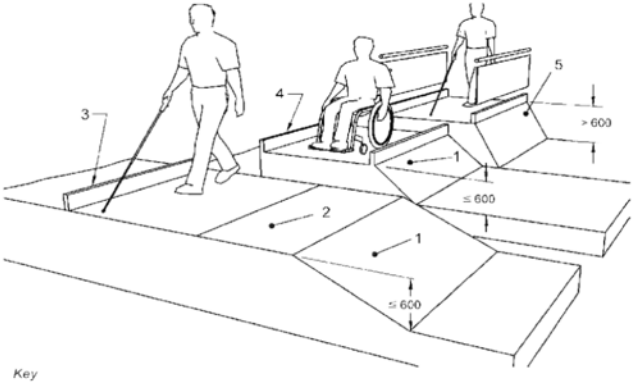

Key
1 Downward slope less than 30°
2 Level margin minimum 600 mm wide
3 Upstand where the difference in level is 600 mm or less
4 Upstand with a minimum difference in LRV of 30 points in relation to the path or ramp
5 Upstand with guarding where the difference in level is greater than 600 mm

Figure 2.3 Side Protection against Falling : In case of walkways

g) Drainage of Path/Access Routes

- The cross-fall of a level or sloped path, a stepped path, a ramp, or a landing, that is provided to permit drainage of surface water across an accessible route shall not exceed 1:50 (20 mm/m).

- The top, bottom and landings of steps and ramps shall be properly drained in order to avoid water flowing down steps and ramps.
- A dished channel should not be constructed within the boundaries of a path or ramp. Dished channels shall have a maximum width of 150 mm and a maximum drop into gulley of 5 mm.
- A drainage grating will be avoided and in case it is not avoidable within the boundaries of a path or a ramp, shall be set flush with the surface.
- As far as possible, the ramp should be covered to avoid fall of direct rain water on the users of the ramp.

h) Lighting for Walkways

Lighting for walkways shall be as given below:

- Illuminated walkways with lighting fixtures upto a height of 4 m from ground level.
- Fixtures for every 20 m to 30m, with light focussed on the walkways.
- Preferably a white light source with average 35 to 40 lux for better colour definition and contrast, benefitting those with poor sight.
- Light pole may preferably be located within the tree-planting zone.
- Lower level light poles are preferred to avoid shadow where there are high trees.

i) Levels, Grooves, Gratings and Manholes

- Vertical level changes up to 6 mm may not need edge treatment. Changes in level between 6 mm and 12 mm shall be levelled off with a slope no greater than 1:2.
- Gratings and manholes should be avoided on walkways/ pathways. If unavoidable, gratings shall have spaces not greater than 12 mm wide in one direction to prevent a wheelchair from getting its casters caught in a drainage ditch or grating cover. Also, the grating bars shall be perpendicular to the travel path in such a way that its longer dimension is perpendicular to the dominant direction of movement. Gratings shall be flushed with finished ground level and shall be treated with a non- slip finish.

2.3 Kerb Ramps

a) General

Kerb Ramps shall adhere to the accessibility provisions in terms of location, materials, slope, guarding, drainage, etc.

Change in the level at kerbs should be by a dropped kerb. Dropped kerb shall be provided at pedestrian crossing and at each end of the footpath of a private street or access road. Kerb separating footpath or ramp from vehicular area shall be a dropped kerb.

b) Width

The kerb width shall be minimum 1200mm, with minimum clearance of at least 800mm at the back of the kerb (Refer Figure 2.4 KERB EXTENSION AT STREET INTERSECTION

c) Location

The Kerb is provided where the vertical rise is less than 150mm. It shall be located so as to prevent obstruction by parked vehicles. It shall be free from any obstruction such as signposts, traffic lights, etc, and shall not encroach into a roadway. Kerb shall be located at places from where one can have unobstructed view. It shall not project into the road surface.

d) Material

- The material shall have a slip resistant surface and the kerb ramps should be designed in a way not to allow water accumulating on the walking surface
- In order to avoid slipping, raised traction strips should be provided.

e) Slope

The gradient of a kerb ramp shall not be steeper than 1:12. Kerb Ramps shall have flared sides where pedestrians are likely to walk across them as shown in Figure below and the gradient of the flared side shall not be steeper than 1:10.

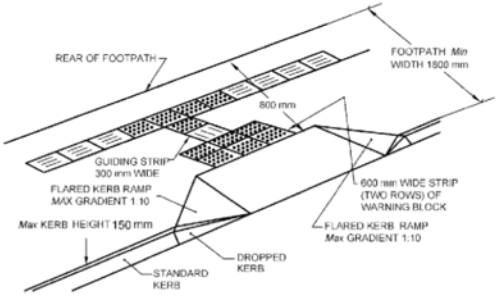

Figure 2.4 KERB EXTENSION AT STREET INTERSECTION

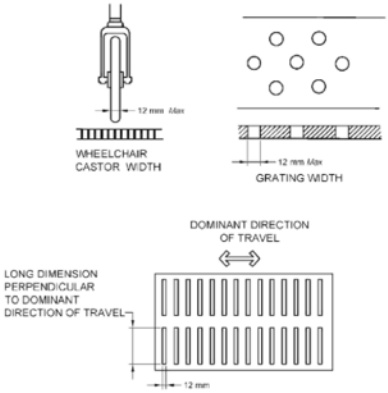

Figure 2.5 INSTALLATION OF GRATING

2.4 Tactile Ground Surface Indicators (TGSI)

Tactile ground surface indicators which include tactile guiding and warning tiles/blocks aid blind and vision impaired pedestrians negotiate the built environment, and shall be of the dimensions as given in GUIDING BLOCK, WARNING BLOCK

Tactile guiding tiles/blocks indicate a correct path/ route to follow for a person with visual impairment. It is recommended to install one/two rows of tactile guiding blocks along the entire length of the proposed accessible route. Care shall be taken to ensure that there are no obstacles such as trees, poles or uneven surfaces along the route traversed by the guiding blocks and nothing is placed in the path blocking the tactile ground route/path. Also, there shall be clear headroom of at least 2 100 mm

height above the tactile guiding tiles/blocks, free of protruding objects such as overhanging tree branches and signage, along the entire length of the walk.

Tactile warning tiles/blocks indicate an approaching potential hazard or a change in direction of the walkway, and serve as a warning of the approaching danger to persons with visual impairments, preparing them to tread cautiously and expect obstacles along the travel path, traffic intersections, doorways, etc. They are used to screen off obstacles, drop-offs or other hazards, to discourage movement in an incorrect direction, and to warn of a corner or junction. Two rows of tactile warning tiles/blocks shall be installed across the entire width of the designated accessible pathway, before intersections, building entrances, level changes, obstacles such as trees, and each time the walkway changes direction. Warning tiles/blocks shall be placed 300 mm from the beginning and end of the ramps and stairs, at landings and entrance to any door.

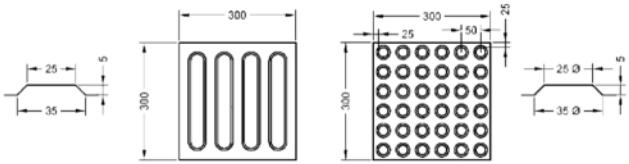

GUIDING BLOCK WARNING BLOCK

Figure 2.6 TACTILE GROUND SURFACE INDICATORS (TGSI)

a) Places to Install Tactile Ground Surface Indicators (TGSI)

TGSI shall be installed at following places:

a) In open space to orient persons with vision impairment;
b) In front of an area where traffic is present;
c) In front of an entrance/exit to and from a ramp, staircase or multi-level crossing facility;
d) Entrances/exits at public transport terminals or boarding areas;
e) Sidewalk/footpath section of an approach road to a building; and
f) From a public facility to the nearest public transport station.

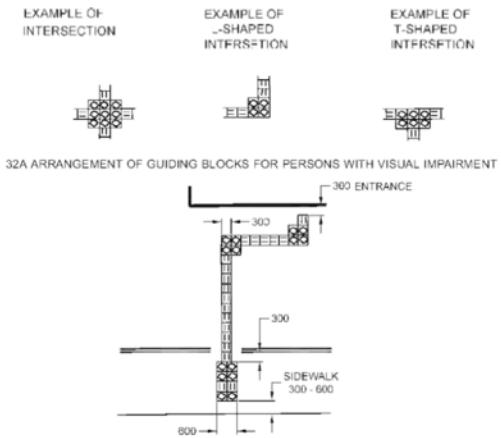

Figure 2.7 INSTALLATION OF TGSI

2.5 Barrier and Hazards

a) General

Any barrier and Hazard in terms of any obstacles, protruding objects, places with insufficient headroom clearance within a public building shall be well treated with sufficient means for easy identification, suitable warning signals and shall adhere to all the accessibility provisions.

b) Obstacles

Obstacles, such as objects or signs mounted on walls, columns or free-standing supports along the walking path shall be avoided. Unavoidable free-standing posts or columns within access routes on pathways shall leave at least unobstructed walking width of 1 000 mm and be clearly marked with visual indicators. Visual indicators at least 75 mm in height with a minimum visual contrast of 30 points difference in the LRV value of the colours to the background shall be placed, one at a height between 800 mm and 1 000 mm above floor level, and the other between 1 400 mm and 1 600 mm above floor level. (Refer Figure 2.8 SOLITARY OBSTACLES

Bollards, short vertical posts generally arranged in a line to guide traffic and protection from vehicle intrusions, shall have a maximum height of 1 000 mm. Bollards, where installed within the access route shall have a minimum clear spacing between them of 1 000 mm so as to provide clear passage width for movement of wheelchairs.

c) Protruding Objects

Unavoidable protruding objects shall not reduce the minimum clear width of an accessible route or manoeuvring space. Protruding objects in the access route shall contrast visually with the background environment.

Objects with a height lower than 1 000 mm can create a hazard for blind or partially sighted people, hence shall be avoided. Permanent equipment that cannot be located outside the boundaries of a path shall be,

a) Designed to be easily seen with a minimum difference in LRVs of 30 points to the background;
b) Shielded to protect against impact; and
c) Accompanied by a feature that warns of the presence of a potential hazard and is detectable for a person using a white cane or stick.

The headroom along a path shall be maintained at a height of not less than 2 100 mm above the surface of the path. Any objects projecting more than 100 mm between 300 mm and 2 100 mm above ground level into an access route shall be clearly visible and detectable with a cane. When a projecting obstacle exists, a protective guard shall be provided at ground level, under the projecting object, such as, a kerb or fixed element at a height of 100 mm-300 mm as cane detection. Cane detection shall not be set back more than 100 mm from the face of the projecting object. Wing walls, side partitions, alcoves or recesses are solutions for projecting elements where free space under the object is needed. Winged protection shall extend continuously between 300 mm and 1 000 mm above the floor and shall contrast visually with the background.

d) Identification

Appropriate identification of specific facilities within a building used by the people is particularly essential to the persons with visual impairments. Raised letters or numbers shall be used to identify rooms or offices. Such identification shall be placed on the wall,

to the left of the door, preferably at a height of 1 500 mm from the floor and comply with the requirements.

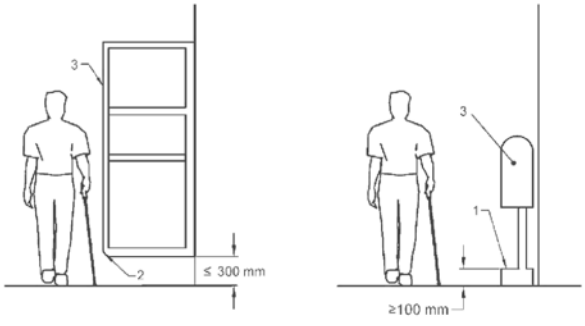

Key

1 Base plinth detectable with cane if a projecting object is more than 100 mm above floor level

2 Winged protection between 300 mm and 1 000 mm above floor level, contrasting visually with the background and detectable with a cane

3 Difference in light reflectance value to background – minimum 30 points

Figure 2.8 SOLITARY OBSTACLES

e) Warning Signals

Following requirements with respect to warning signals near barriers shall be complied with:

a) Audible warning signals shall be accompanied by simultaneous visual signals for the benefit of those with hearing disabilities.

b) Visual signals shall be accompanied by simultaneous audible signals for the benefit of the blind and visually impaired people. To assist blind people, lettering and symbols on signs should be raised for tactile reading.

c) Information based on colour codes only should be avoided; colour blind people may find them difficult to understand.

2.6 Outdoor Furniture

a) General

Outdoor furniture such as benches, mail boxes, lampposts, signboards, telephone booths, newspaper kiosks, planting tubs, garbage bins, etc. shall adhere to the accessibility provisions in terms of dimensions, material and colour, easy identifiable and accessible etc.

b) Resting Facilities

- Street furniture should be located so as to allow for the free passage of all people without creating hazards.
- Textural changes in the footpath surface help sightless people to identify the location of public amenities.
- Resting facilities should be placed outside the main circulation path in public parks, recreational places, pathway crossings, in front of accessible entrances and exits and wherever necessary.
- Resting facilities should be provided at regular intervals between 100.00 m and 200.00 m.
- Some seating accommodations should be placed close to public toilets, telephones booths etc

- Resting spaces with benches should allow a minimum of 1.20 m of adjoining space for a wheelchair.

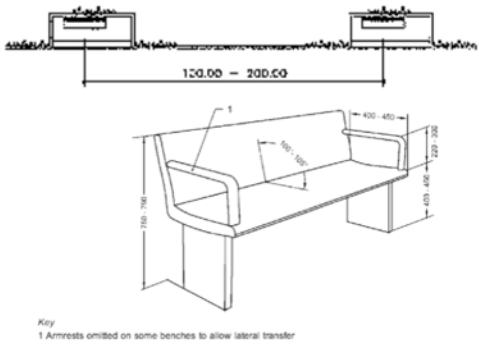

Figure 2.9 EXAMPLE OF A BENCH WITH ARMRESTS AND BACK SUPPORT

- Public seats and benches should be approximately 0.45 m above floor level, with backrests at approximately 0.70 m above floor level.
- The height of a table should be between 0.75 m and 0.90 m and the minimum depth under the table should be 0.60 m in order to fit a wheelchair under all sides (Refer Figure 2.10 Outdoor Table with sufficient leg room).

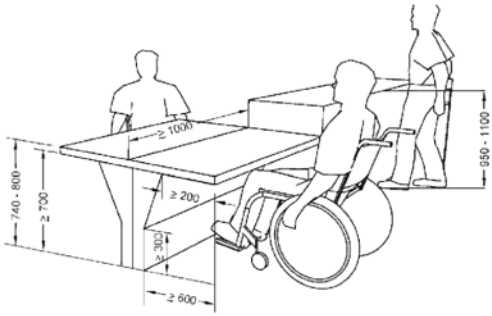

Figure 2.10 Outdoor Table with sufficient leg room

- One side of seating may be without arm rest to address the transfer needs of persons with disabilities.
- A colour contrast should be provided around the seating area for ease of identification by persons with low vision.

c) Mailboxes

- Mailbox slots should be mounted at an accessible height between 0.90 m and 1.20 m.

d) Water Fountains

Drinking fountains shall have two spouts located at different heights, one convenient to wheelchair users at approximately 0.85 m, and one at approximately 0.95 m for non-differently abled people.

CHAPTER. 3 Accessible Parking Space

3.1 Scope

This chapter sets out the minimum comfortable requirements for the design and layout of parking facilities including various provisions for differently abled people. It aims to provide accessible car parking spaces designated for the use of persons with disability.

3.2 General

Accessible parking space open to public shall adhere to the accessibility provisions in terms of its location, number of designated accessible parking spaces, dimensions and surface requirements, level change from adjacent higher pedestrian path, handrails, parking signage, car park entrance and parking controls.

a) Location

Accessible parking space shall be as near as possible to the main entrance, within a distance of 30 m.

In case the designated accessible parking space is inside the building, separate pedestrian ramp or lift shall be provided close to it within a distance of 30m for unobstructed access to the principle entrance to the building.

b) Number of Designated Accessible Parking Spaces

Total number of parking spaces to be designated as accessible shall be as given in space for GPOA/GPRA/ institutions area.

Table 3.1 Total Accessible Parking Space

Sl.no.	Total parking spaces provided	Designated accessible parking space
1	10	1
2	25	2
3	50	3
4	100	4
5	200	6
6	>200	6+1 for each additional 100

In case of special facilities e.g. health care facilities, shopping areas, recreation facility etc., greater number of designated accessible parking spaces should be considered

c) Parking Dimensions and Surface Requirements

The minimum width and length of parking bay shall be 3 900 mm X 5 400 mm. The width includes a minimum transfer area width of 1500mm. Two parking consecutive accessible parking shall have one shared transfer area with minimum width of 6 300 mm. (Refer Figure 3.1 Accessible Parking Spaces Accessible Parking Spaces with One Shared Transfer Area)

The surface shall be firm and levelled without aeration slabs. The transfer zones, both on the side and the rear shall have yellow or white cross-hatch road markings.

Parking space shall not be located on a gradient greater than 1:50, throughout its length and width. The accessible route of 1 200 mm width shall be provided for wheelchair users to pass behind vehicle that may be backing out. (Refer Figure 3.1 Accessible Parking Spaces Accessible Parking Spaces with One Shared Transfer Area)

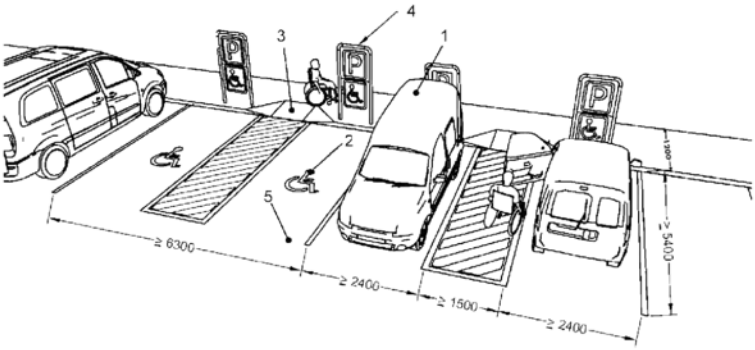

Key
1 Minimum unobstructed height for vans 2 600 mm
2 Symbol of accessibility
3 Kerb ramp
4 Signage, including symbol of accessibility
5 Firm ground

Figure 3.1 Accessible Parking Spaces Accessible Parking Spaces with One Shared Transfer Area

d) Wheelchair-accessible van Parking

A wheelchair-accessible van is a vehicle that has been modified by increasing the interior size of the vehicle and equipping it with a means of wheelchair entry, such as a wheelchair ramp or powered lift.

- For road side parking of an accessible van, the minimum dimensions shall be 9000 mm × 2 400 mm with a kerb to access the nearest footpath/sidewalk. (Refer Figure 3.2 Parking Space

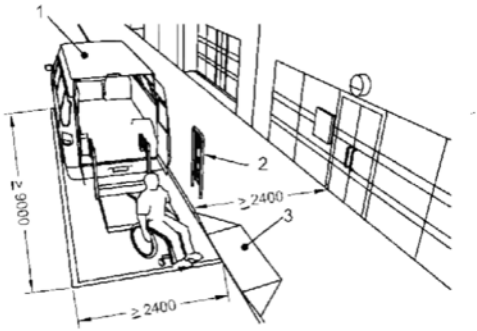

Key
1 Minimum unobstructed height — 2 600 mm
2 Signage, including symbol of accessibility
3 Kerb ramp

Figure 3.2 Parking Space for Accessible Van along footpath

- In case of van parking with auxiliary movable ramps, the minimum width of the accessible parking space for a van shall have at least the same dimensions as for car parking spaces.

e) Signage for Parking

International symbol of accessibility shall be displayed at entrances and access to car parking. For other details refer Chapter 18.

f) Car Parking Controls

At place where automated parking payment machine is provided, all controls shall be installed at the height between 800 mm and 1 000 mm, and shall have sufficient manoeuvring space around it for ease of operation for wheelchair users. Location of machine should not create a hazard, barrier or obstruction to the access.

CHAPTER. 4 Approach to the Building

4.1 Scope

It is important to design a barrier free approach to the building for people to enter, leave or access the building facility independently. There should be an accessible route to the principal entrance to a building.

4.2 Access at entrance and within the building

a) General

Access to the building shall adhere to the accessibility provisions with respect to accessible entry to the building, various design requirements for access at the entrance and within the building, internal corridors and accessible routes.

b) Entry to the building

The entry to the building shall be facilitated by the following:

- Vehicle drop-off area of minimum of 9 000 X 3600 mm in length with a kerb ramp for a difference in level between the carriageway and the footpath in case of footpath
- TGSI to the main entrance where no other clues indicate the path to the building
- Building shall have all accessible entrance doors. In case the accessible entrance is different from the main entrance, shall be located adjacent to the main entrance and not at the rear of the building. The accessible entrance shall be provided with signage and easy to locate.
- Symbol shall be displayed at all other non- accessible entrances to direct persons with disabilities to the accessible entrance.

c) Design Requirements for Access at entrance and within the building

- A level landing of minimum 1800mmX1800mm shall be provided on either side of the entrance door. The width of entrance door shall be minimum 900mm and corridor width leading to and from should be minimum 1200mm. At the approach door location, texture difference in flooring shall be provided for visual impaired person. Glazed entrance doors shall have manifestations on the glass at two levels i.e. one between 800 to 1000mm and another between 1400 to 1600mm above the floor
- Accessible entrance should have an unobstructed tactile guided route to the lifts. Tactile layout plan shall be provided at the entrance for people with visual impairments. In multi storey buildings, the accessible entrance must have an accessible route leading to the elevators.
- Floor surface shall be in level with the floor finish and shall be of material that facilitates movement of wheelchairs
- Recess floor mats in the floor shall be flushed with the flooring on either side of door. Beepers at all the main entrance shall be provided to enable people with visual impairments to locate them.
- Symbol should be displayed at all other non-accessible entrances to direct person with disability to the accessible entrance.

d) Internal Corridors and Accessible Routes

The corridors shall be designed in a way that main horizontal circulation is level and step free on each floor, avoiding any level changes, internal layout simplified, accessible and easily understood and designed to facilitate ease of movement for all people. Where a raised

threshold is necessary at a door opening, its maximum height shall be 12 mm, and those exceeding 5 mm shall be bevelled.

Routes should preferably intersect at right angles to each other and be easy to follow and have detectable cues and different visual contrast from the surroundings

TGSIs may be provided for orientation and way finding for easy egress and evacuation avoiding carpeting. If carpet is used, it should be fixed firmly with a pile not higher than 12mm.

The minimum unobstructed width of corridors shall be 1 500 mm, with a preference for a width of 1 800 mm. Where corridor is less than 1 800 mm wide, passing places shall be provided in the corridor, 1 800 mm wide and at least 1 800 mm in length at reasonable intervals. Unobstructed minimum width of corridor shall be exclusive of handrails and any other projections, for example portable fire extinguishers, notice boards, etc.

Where a doorway exists adequate circulation space, shall be provided. Changes of direction for 90 degree, within a corridor shall have a turning circle with a diameter of 1 500 mm or more, clear of any obstructions and shall have no gradient (Refer Figure 4.1 SPACE REQUIRED FOR 90º TURN

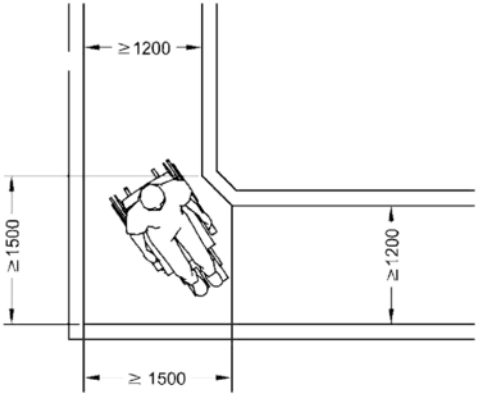

Figure 4.1 SPACE REQUIRED FOR 90º TURN

Circulation space for 180-degree turn shall not be less than 2000mm in the direction of travel and resting area provided at every 30mts distance.

Stable, firm, level slip resistant, matt floor finish surface shall be provided for easy access by everyone.

Lighting in a corridor should be even, diffused and without glare, reflections or shadows. Minimum illumination level in the corridor should be 150 lux.

Doors should not open outwards from rooms directly into a frequently used corridor, with the exception of doors to accessible toilets and service ducts, where a door opens into an infrequently used corridor such as emergency exit, the corridor width should allow a clear space of 900 mm within the corridor when the door is open. Such doors should be located clear of any sloping floor surfaces in the corridor. Any door that opens towards a frequently used corridor should be located in a recess at least as deep as the width of the door leaf. The leading edge of any door that is likely to be held open should “contrast visually” with the remaining surfaces of the door and its surroundings to help identification by visually impaired

people. The architrave should contrast visually with the wall surfaces surrounding the doorway.

4.3 Ramps

A ramp is a sloping pathway leading from one level to another. Ramps of an appropriate design shall be provided at all changes in level other than those served by an accessible lift or accessible lifting mechanism accommodating the specific requirements of persons with disabilities. Ramps allow persons in wheelchair to move from one level to another. However, many ambulant persons with disabilities negotiate steps more easily and safely. Hence, it is preferable to provide accessibility by both steps and ramps.

a) General

Ramp open to public shall adhere to the accessibility provisions in terms of its basic design requirements including slope, width, surface, landings, handrails etc.

b) Design Requirements

Ramps shall meet the following general requirements (Refer Figure 4.2 Ramp Details:

- Wherever the rise of a ramp exceeds 300 mm, an additional flight of steps shall also be provided for differently abled persons. An isolated single step is not acceptable hence, a ramp is preferred to a single step.
- Where there is a large change in elevation that requires multiple ramps and landing combination, other solutions such as lifts should be considered.
- Ramps shall not ideally connect straight to doors as wheelchair users need a levelled platform at the end of the ramp to manoeuvre and negotiate opening the door.
- A curved ramp is not a preferred design solution. Similarly, a cross fall may put a wheelchair user at risk and may adversely affect steering, particularly on manually propelled chair.
- Shiny, polished surface materials that cause glare shall not be used for ramps.
- Single row of tactile warning blocks (TGSI) shall be placed at the beginning and end of each ramp. This shall be placed 300 mm before the beginning and end of each ramp run to indicate the level change to visually impaired persons.
- Where the horizontal run of the approach ramp exceeds 9000 mm length, an alternative stepped approach, in addition to the ramp approach, shall be provided for people with ambulatory disabilities.
- Where there is a large change in elevation that requires multiple ramps and landing combination, other solutions such as elevators would be considered.
- Any part of an accessible route with a slope greater than 1:20 shall be considered a ramp.
- The recommended gradients for ramps are given in the following Table:

Table 4.1 Ramp requirements

Sl. No.	Level Difference	Ramp Gradient (Maximum)	Ramp Width	Handrail on both sides	Other Requirements
1	150-300mm	1:12	1200	Yes	-
2	301-750mm	1:12	1500	Yes	Landings after every 5m of ramp run
3	751-3000 mm	1:15	1800	Yes	Landings after every 9m of ramp run
4	> 3000mm	1:20	1800	Yes	Landings after every 9m of ramp run

c) Width and Surface

The minimum clear width of a ramp (exclusive of handrails) shall be 1 200 mm and shall increase correspondingly as the level difference addressed by the ramp increases.

Outdoor ramps and their surface shall be designed to prevent water from accumulating on the walking surfaces and covered for protection from rains. In case covering is not feasible, ramps and landing surfaces shall be glare free, smooth, level, even and slip resistant even when wet. The surface finish shall be hard and suitable for the volume of traffic that the ramp is likely to experience.

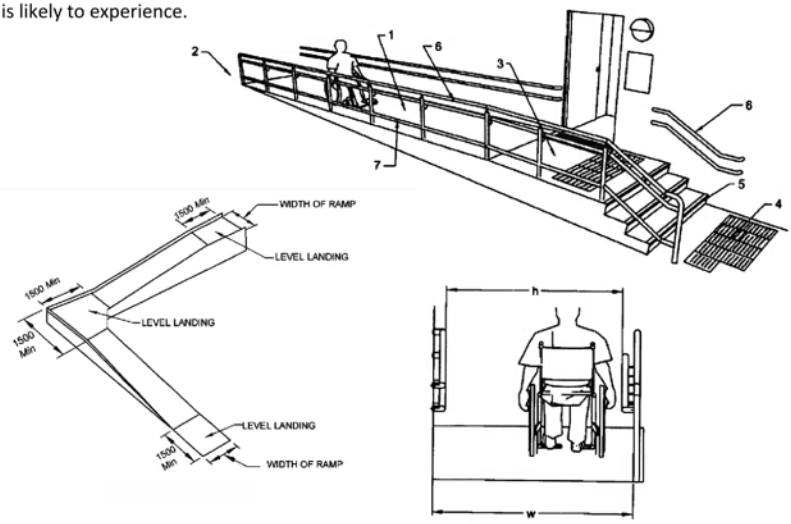

Key
1 Ramp surface (*see* Table 10 for maximum slope and length)
2 Horizontal landing
3 Horizontal landing
4 Tactile ground surface indicator in front of stairs
5 Complementary stairs with markings
6 Handrails on both sides of ramp and stairs
7 Upstand, *Min* 150 mm
h Width between handrails
w Width of ramp surface

Figure 4.2 Ramp Details

d) Landings

An end landing shall be provided at the bottom and the top of a sloped path, a stepped path, or a ramp and also where the run changes direction. The area of the end landing may be designed as a part of the continuing path.

The length of an end landing and an intermediate landing shall not be less than 1 500 mm. At place where the ramp run changes direction, the minimum landing dimensions shall be 1 500 mm × 1 500 mm (Refer Figure 4.2).

The area of a landing shall be clear of any obstruction including the path of swing of a door or a gate. Landings shall also be provided at regular intervals of not more than 9 000 mm of every horizontal run. If the end landing follows or precedes a turn for a pathway or an entrance, the minimum dimension of the landing shall be minimum 1 500 mm × 1 500 mm.

Ramps and landings not adjacent to a wall would have an edge protection in form of a 75 mm kerb.

e) Handrails for Ramps

Please Refer Chapter 9: Handrails.

CHAPTER. 5 Reception Areas, Counters and Desks

5.1 Scope

Reception Areas, Counters, Desks and Ticket Offices, Cloak Room etc are categories of places which are very critical and where the public or a section of the public is likely to approach to seek services or information. To enable everyone to seek these information independently and without any assistance, accessibility provisions are to be provided in such areas.

5.2 Reception Area & Counter Desks: General Requirements

- The counters at the entrance would be located at easily identifiable location so as to be easily recognizable from the building entrance.
- Information reception areas shall be positioned near the main entrance
- Positioning of service counters in front of windows where bright sunshine may come shall be avoided as it causes the user's face to be in shadow which makes difficult in lip-reading. Reflections and glare should be avoided.
- The counter of reception shall be at 2 different heights for ease of access to everyone. Part of the counter should be lowered to accessible height of 750- 800mm from floor level for a wheelchair user, and for person standing, the suitable height would be from 950-1100 mm.
- For desks where writing is required, leg clearance below the counter should be provided up to the depth of 600mm
- Such places should be accessible to wheelchair users on both sides. A clear manoeuvring space at least 1 500 mm × 1 500 mm shall be provided in front of the counter on the receptionist's side and on the visitor's side; 1 800 mm × 1 800 mm is preferred.
- Audio loop induction unit (Hearing enhancement system) should be installed at the counter to assist hearing aid users, and be clearly marked with appropriate signage/symbol.
- Entrance flooring systems or tactile ground surface indicators can help in locating reception counters for people who have vision impairment. Such flooring should be designed to minimize trip and slip hazards.
- Tactile pictographic map of building shall be placed near the counter.
- Counter desk should be well illuminated to a level of at least 200lux in the room, and on the desk in a range of 350 to 450 lux.
- Information and direction signs should be placed at the reception points
- Reception areas and lobbies should have locational signs for elevators, fire exits, accessible facilities like toilets, etc., directional and locational signs for major services like cafes, reception, public telephone, etc. Emergency signage for easy evacuation. In each case, the accessible route should be marked to avoid confusion.

5.3 Ticket Offices: General Requirements

- If a queue number ticket system is used, it shall be suitably designed for accessibility.
- All control devices shall be located at a height for reaching and operating, between 800 mm and 1 100 mm above floor level and shall be located at a minimum of 600 mm with a preference of minimum 700 mm, from any internal corner.
- All necessary information shall be given in simple wording with sufficient visual contrast. The ticket machine and the calling system shall provide visual and audible output.

5.4 Seating in waiting Areas

a) General

The location of seating area near reception counters, or entry to a public building should be designed close to the entrance/exit, easy to find and placed at a location so as to not disturbing the general circulation. Seats shall be designed with armrests to facilitate sitting down and standing up. The seats would also have back rests for ease of users.

Floor space should be clear from any obstruction and level for the seating facilities with sizes not less than 900mmx1200mm. (Refer Figure 2.9)

Seating for persons with disabilities should be accessible from main entrances and lobbies. Various seating/viewing choices should be provided for persons in wheel chairs throughout the main seating area.

Texture change in walk ways adjacent to seating shall be discernible for blind persons. Local textural changes incorporated into the paving helps in identification of such public amenities by differently abled persons. If fixed bench/ seat projects out without any connection to the floor, then there must be an upturn from the floor finish or tactile rendering around it detectable by the visually impaired by the white stick.

Where a forward approach is used, a clear knee space of at least 900 mm wide, 480mm deep and 650 mm high shall be provided, which may overlap the clear floor space by a maximum of 480 mm

Writing surfaces or service counters shall not be more than 800 mm from the floor and have clear knee space of 680mm

b) Dimension of seating in waiting areas

Seat height shall be 400 mm to 450 mm, with back support height 750 mm to 790 mm, and Seat depth 400 mm to 450 mm, angle of seat to backrest 100° to 105° with armrest height 220 mm to 300 mm above seat, with armrest set back from front of seat < 75 mm, and with a minimum 150 mm set back under the seat for feet when standing up.

c) Seating at the Desks, Tables, etc

To allow a frontal approach with a wheelchair to a table, desk, counter, telephone, etc, an unobstructed space shall be provided with a minimum free height of 700 mm, minimum free depth of 600 mm and minimum width of 900 mm to accommodate knees underneath. For footrests, a minimum height of 300 mm is required. If tables with fixed seats are used, there shall be a place for at least one person in a wheelchair at the table.

NOTE: This may overlap the clear floor space by a maximum of 480 mm

CHAPTER. 6 Staircase, Lift, Escalator, Moving walks, Platform Lifts

6.1 Scope

The vertical movement and level changes in a building will be addressed by making suitable provisions in Staircases, Lifts, Escalators and Moving walkways provided in the building along with the provision of Platform Lifts.

6.2 Staircase

a) General

Staircases are intended to bridge the vertical distance between two floors or a/level difference in a building and consists of landings, handrails and steps having treads and risers. It shall be of adequate design to allow all persons, with or without a disability, to travel safely and independently.

Staircases can be supplemented by lifts /Platform Lift and/or ramps.

b) Elements of Staircase

- Steps shall be of consistent height and depth throughout. Risers, treads, maximum number of risers per flight and minimum width of stairs shall be in accordance with NBC 2016 and building byelaws, whichever is more stringent. The riser of a step shall not be open. Projecting nosing and open stairs shall not be provided to minimize the risk of stumbling. Spiral stairs shall be avoided as far as possible.
- The staircase landing depth for various occupancies shall be in accordance with relevant provisions of NBC 2016 except for residential where it shall be minimum 1 500 mm and may be reduced to 1200 mm for two dwelling units.

c) Tactile Ground Surface Indicator (TGSI)

- Strip consisting of Tactile Warning Blocks which is one type of Tactile Ground Surface Indicator shall be provided in every staircase. It shall be placed 300 mm before the beginning and 300 mm after the end of each flight of steps (Refer Fig. 6.1).
- For landings leading to a floor or those enclosed by wall, railing or balustrade, tactile warning strips of 300 mm in width shall be provided (Refer Fig. 6.1); for those leading to an open space or the entrance/exit of a building, the tactile warning strips shall be 600 mm in width. In this case, Braille and tactile information signs shall be provided on the adjacent wall to indicate the presence of an opening. For a staircase with intermediate steps between two flights, the provision of tactile warning strips shall follow the same arrangement.

d) Avoiding Projection in the Stairs

- No appliances, fixtures or fittings shall project beyond 90 mm from the surface of any wall in a staircase up to a level of 2000 mm from the treads of the staircase. If such a projection is unavoidable, the same shall also be extended downwards to the level of the treads.

e) Colour Contrasting

- Colour contrast shall be provided on each step with contrasting colour bands 50 mm wide on edge of the tread (Refer Fig. 6.1).

6.1: STRIP OF WARNING BLOCKS AT LANDING TO THE FLOOR AND AT EVERY FLIGHT OF STAIR WITH COLOUR CONTRAST FOR STEP EDGES

6.3 Lift

a) General

At least one accessible lift in existing multi-storied building shall be provided on accessible route with accessible lift landing. In new construction all lifts shall be accessible.

b) Lift size

- The minimum size of the lift car shall be 1 500 mm x 1 500 mm (Refer Fig. 6.2).

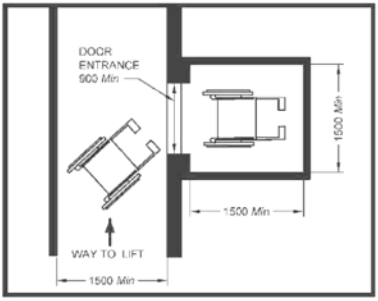

6.2: LIFT SIZE

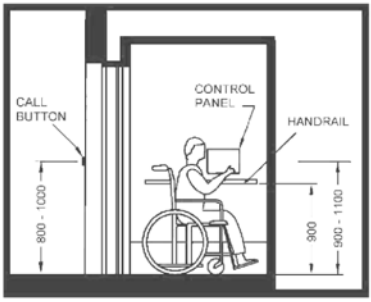

6.3 PLACEMENT OF LIFT ACCESSORIES

c) Lift Door:

- Lift door shall be automatic with horizontal sliding doors &clear opening of minimum900 mm. A gap between the lift door and building floor shall not be more than 12 mm.

- Time of closing of an automatic door shall be more than 5 s and the closing speed shall not exceed 0.25 m/s. A mechanism to increase this time shall be installed to be customized by a user with mobility impairments.

d) Call Button:

- Clear floor space of at least 900 mm × 1 200 mm with no obstruction placed for wheelchair user from reaching the call button and shall be Installed at a height 800-1 000 mm (Figure6.3).

e) Control Panel

- Touch control panels shall not be used.
- The control panel inside the lift shall be placed at a height of between 900 mm to 1100 mm from the floor level either horizontally or vertically within this space (Refer Fig. 6.3).
- They shall have buttons with Braille/raised letters and in sharp contrast from the background.

f) Handrails

- Handrails shall be placed at a height of 900 mm from the floor level and are fixed on both sides and at the rear of the lift. For other details refer chapter 9- Handrails, Railing and Grab Bars.

g) Audio and Visual Indicators

- Voice announcement system clearly audible and of 50 dB along with a visual display shall be provided to indicate the floor level with the information that the door of the cage is open or closed for entry or exit.

h) Lift signage

- A sign indicating the number of the floor arrived shall be provided on each lift landing on the wall opposite the lift in big fonts (refer chapter -18 Signage) with good colour contrast.
- A floor directory of the main facilities and services available on the lift landing/ Lift lobby shall be installed, along with an accessible emergency egress route that clearly indicates the location of the nearest refuge area for persons with disabilities.

i) Emergency Warning alarm

- Lift car shall be equipped with Emergency Warning alarm Device (two-way communication system) permanently connected to a manned security point with visual and audible information feedback for passengers confirming that, the alarm has been sent, using a yellow enlightened bell-shaped symbol; and the alarm has been received, voice communication established, using the green enlightened symbol consisting of two heads.

6.4 Escalators and Moving Walks

a) General

- The location of escalators and moving walks shall always be considered in relation to the position of adjacent fire protected lift shafts and lobbies, staircases and their associated areas of rescue assistance as per Chapter 16- Emergency Evacuation in building.
- The audible signals or pre-recorded messages that indicate the start and finish of the escalator and special warning notices and indicators shall be provided at the top and bottom of escalators where step rises reduce suddenly and dramatically when not operational.

6.5 Platform Lift: Vertical Lifting/ Inclined Platforms

a) General

- Where it is impracticable to provide a lift or a ramp, a platform lift shall be considered as a reasonable alternative for vertical circulation by providing vertical lifting platforms with maximum level changes of 2 500 mm(Refer Fig. 6.4) and Inclined lifting platforms (Refer Fig. 6.5) can be installed along the stair wall as long as they do not obstruct the required width of the exit in all the cases.

b) Size

- The minimum size of the platform lift shall be 1 100 x 1 400 mm.
- As/ NBC, in existing buildings of minor public importance and with few visitors, where sufficient space is not available, other dimensions may be considered, for example 900 mm × 1 250 mm.

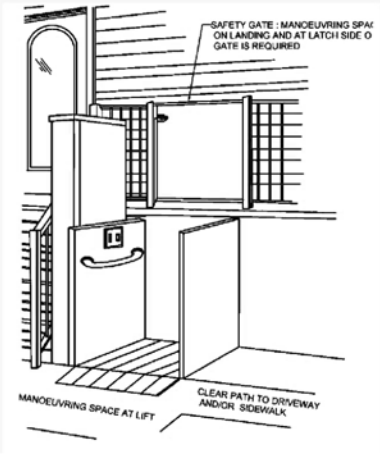

6.4 VERTICAL LIFT PLATFORM

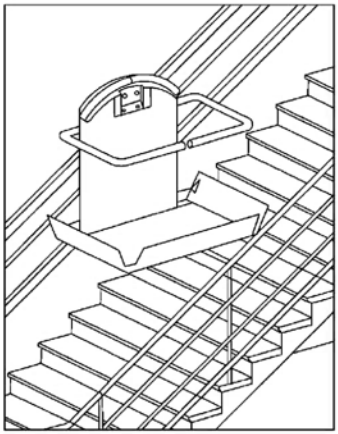

6.5 INCLINED LIFT PLATFORM

CHAPTER. 7 : Toilet, shower and change room, fixtures & accessories

7.1 Scope

This chapter deals with the accessible sanitary facilities viz. toilet, shower, change room and its fixtures &accessories, for variety of users i.e. ambulant, non-ambulant, and elderly and children.

7.2 Toilet

a) General

Accessible toilets that can be used by both sexes (unisex accessible toilets) allow the greatest flexibility for people who require assistance hence is the preferred option. Wheelchair accessible unisex toilets shall be always being provided in addition to wheelchair accessible separate sex toilets. Similarly, a provision of an enlarged cubicle for ambulant disabled people in a separate sex toilet room can also benefit parents with children and people who need an enlarged space (for example those with luggage)

b) Location

The accessible toilet room shall be located as close as possible to the entrance/reception/ waiting area of the building and shall be easy to find. The provision of the accessible toilets shall be such that any wheelchair user/ambulant disabled person don't have to travel more than 30 m on the same floor.

c) Requirement/ Provision

- At least one unisex wheelchair user accessible toilet room of Type A shall be provided on ground floor. When more than one accessible toilet of Type B is planned, a choice of layouts suitable for left hand and right-hand transfer shall be provided. In case such toilets are located in similar position on each floor of a multi-storey building, it shall be allowed for right- and left-hand transfer on alternate floors. One accessible toilet (Type A or Type B) in single sex toilet block (male and female section of toilet block) shall be provided depending on the footfall and space.
- In a separate sex toilet/ sanitary room there shall be provision for one cubicle suitable for use by ambulant disabled.
- Where urinals are provided, there shall be urinals for wheelchairs and ambulant disabled people.
- Where there is requirement for only one toilet or sanitary room in a building, a wheelchair accessible unisex toilet of Type A shall be provided but of a greater width to accommodate a standing height washbasin and a urinal.

d) Signage

Refer Chapter 18.

e) Wheelchair User Accessible Toilet Rooms (TYPE A)

- Toilet Room with lateral transfer from both sides as shown in Figure 7.1 shall have minimum internal dimensions 2 200 mm × 2 300mm and horizontal foldable grab rails at both sides see (Figure 7.2).
- The layout of the fixtures in the toilet shall be such that there is a clear manoeuvring space that provides a wheelchair turning radius of 1 800 mm in front of the water-closet and washbasin in the accessible toilet unit.

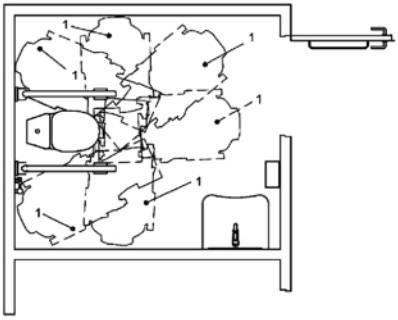

Key
1 Possible transfer positions

7.1 TYPE A TOILET TRANSFER OPTIONS

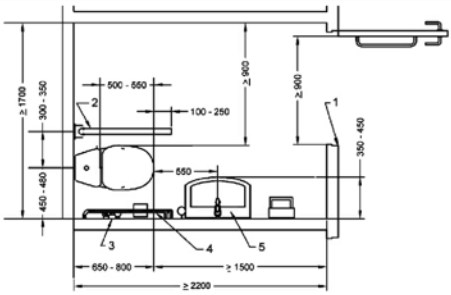

Key
1 Minimum 900 mm
2 Foldable grab bar
3 Independent water supply
4 Grab bar on wall
5 Washbasin

7.2 TYPE A TOILET ROOM- LATERAL TRANSFER FROM BOTH SIDES

f) Toilet Room with Lateral Transfer from One Side Only (Type B)

Accessible toilet type B (Refer Figure 7.3 and 7.4) has lateral transfer only from one side with minimum internal dimensions of 1 700 mm × 2 200 mm. It shall have horizontal and vertical grab rail on wall beside the water-closet and foldable grab rail (Refer Figure 7.4).

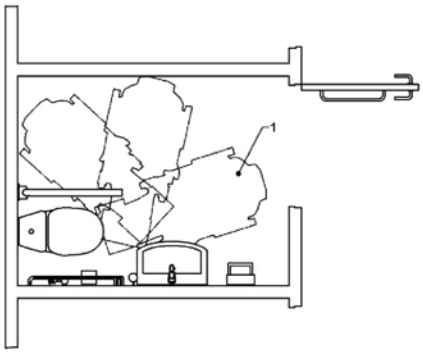

Key
1 Possible transfer positions

7.3TYPE B TOILET ROOM LATERAL TRANSFER OPTION FROM ONE SIDE

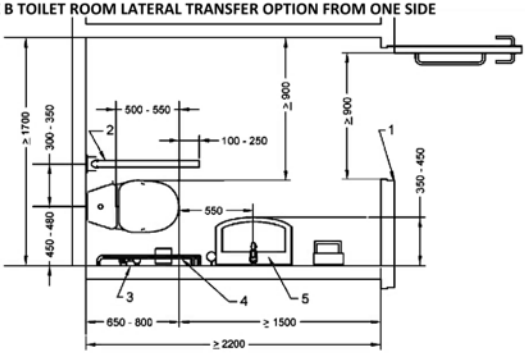

Key
1 Minimum 900 mm
2 Foldable grab bar
3 Independent water supply
4 Grab bar on wall
5 Washbasin

7.4 EXAMPLE OF TYPE B CORNER TOILET ROOM-LATERAL TRANSFER FROM ONE SIDES

g) Common requirement for both Types (Type A & B)

- Toilet shall have all fixtures and utilities arranged in a manner to provide a clear space of 900 mm × 1 350 mm for wheelchair users to access them and clear space of not less than 900 mm wide next to the water closet.

h) WC Compartments for Ambulant Disabled People

- WC compartments shall have clear manoeuvring space of minimum 900 mm × 900 mm in front of the WC with horizontal and vertical grab rails provided on both sides of toilet (Refer Figure 7.5).

- Hand wash facilities shall be common for WC compartment in single sex toilet.

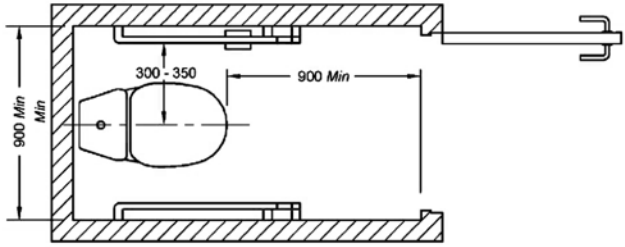

7.5 TOILET FOR AMBULANT DISABLED WITH L-SHAPED GRAB BAR

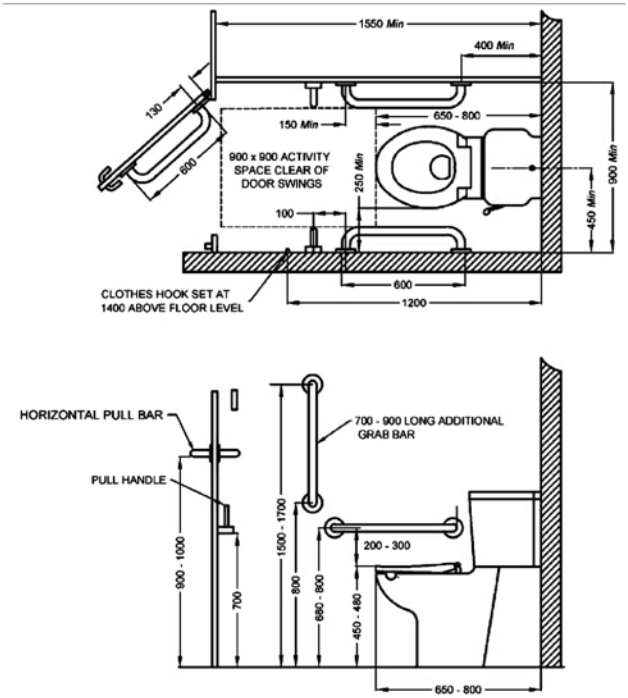

7.6 PLACEMENT OF FIXTURE IN TOILET FOR AMBULANT DISABLED

i) Public Toilets

- Male section shall have one urinal with support grab bars for ambulatory disabled and at least one urinal for children at a lower height. Both male and female section shall have one WC for ambulant disabled;
- It shall have one Type-A unisex accessible toilet room with independent entrance.
- Depending on the footfall, one Type-B accessible toilet in both male and female toilet groups may also be provided.

7.3 Toilet Fixtures & Accessories

a) General

- Toilet accessories includes Toilet door, water closet, wash basin, grab bars, hand dryer, towel, soap dispensers, waste bins, hand-held shower, Coat hooks, Dispensers for toilet paper, water supply, taps, urinal etc. These shall be properly placed for ease of use.

b) Toilet or Sanitary Room Doors

- It shall be in accordance with chapter 8- Doors and Windows.
- It shall be provided with horizontal pull bar, a least 600mm long, located 130mm away from hinged side and height of 900 to 1000mm. An inside horizontal pull handle shall be provided at height of 700mm above the floor.

c) Water-Closet

- It shall be so located that the distance between centreline of the water-closet to the adjacent wall in case of corner toilets (Type B) be between 450 mm and 480 mm (Figure7.4). In case of Type A toilet, the distance from the edge of the WC seat to the adjacent wall shall be 900 mm.
- The top of the water-closet shall be between 450 mm and 480 mm from the floor.
- The minimum distance from the front edge of the water-closet to the rear wall shall be between 650 mm and 800 mm.
- The water-closet shall preferably be of wall-hung or corbel type as it provides additional space at the toe level. Where water cistern is used, the cover shall be securely attached and the flush control shall either be lever type or automatic, and located on the transfer side of the water-closet. The flush control shall not be located more than 1 000 mm from the floor.

d) Grab Bars

- On both sides of a toilet, a grab bar (whether drop-down or fixed to the wall) shall be provided on both sides of W.C. at a distance between 300 mm and 350 mm from the centre line of the WC.
- On the sides where a lateral transfer is possible, a foldable grab bar (drop-down support bar) shall be provided at a height of 200 mm to 300 mm above the water-closet. The length of the foldable grab bar shall be extended from the front edge of the water-closet between100 mm and 250 mm. The positioning of a foldable grab bar shall allow access from a wheelchair when folded up.
- Where a wall is beside the WC, a horizontal grab bar shall be provided at a height of 200 mm to 300 mm above the water-closet and a vertical grab bar shall exceed from the horizontal grab bar to a height of 1 500-1 700 mm above floor level. The grab bar shall extend a distance of minimum 150 mm to the front edge of the water-closet. Alternatively, one L-shape grab bar, 600 mm long horizontal and 700-900 mm long vertical shall be mounted on the nearest side wall to the water-closet. (Refer Figure 7.7).
- The other detail shall be in accordance with chapter 9-Handrails, Railing and Grab Bars

e) Washbasin

- A round edged washbasin shall be provided within an accessible toilet room and shall be positioned in such a way that it allows access from a wheelchair with minimum clear floor space of 900 mm wide by 1 200 mm deep, of which a maximum of 480 mm in depth may be under the washbasin (Figure 7.8).
- It shall be mounted such that the minimum distance between the centreline of the fixture and the side wall is 460 mm; and the top edge of the washbasin is between 750 mm and 850 mm from the floor.
- The space under the washbasin shall be unobstructed with a knee clearance centred on the washbasin between 680 mm and 700 mm high, and 200 mm deep. In addition, a toe clearance of at least 300 mm high shall be provided (Figure 7.8). The front edge of the washbasin shall be located within a distance of 350 mm to 600 mm from the wall.
- The hot water and drain pipes within the knee space or toe space shall be properly insulated.
- Automatic or lever type faucets/taps shall be provided with temperature of 40 degree Celsius for hot water tap.
- The reaching distance to the tap control shall be a maximum of 300 mm (Figure7.8).
- The mirror above the washbasin shall be positioned to have the bottom edge at a height of not more than 900 mm above the floor, upto a height of 1 900 mm (Figure 7.8).
- A shelf with minimum dimensions of 200 mm × 400 mm shall be provided near the washbasin at a height of 850 mm, or combined with the washbasin.

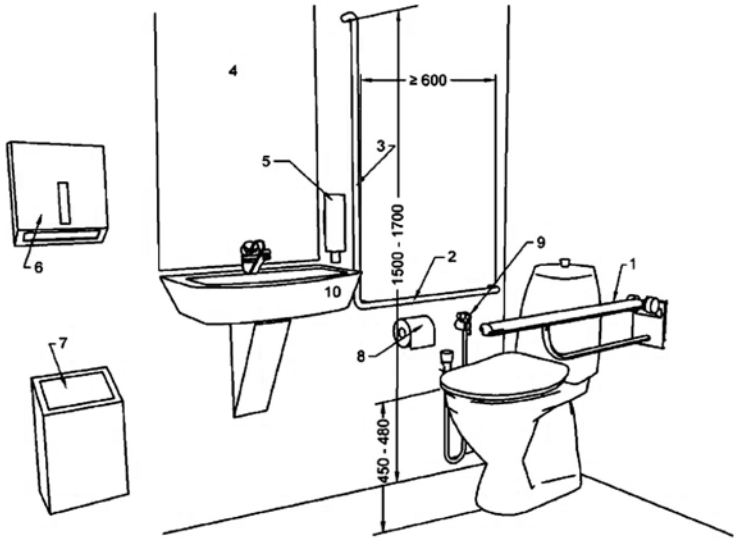

Key

1 Drop down support grab bar at seat height plus 200 to 300 mm
2 Wall mounted horizontal grab bar at seat height plus 200 to 300 mm
3 Wall mounted vertical grab bar
4 Mirror, top height minimum 900 mm, bottom height maximum 900 mm above floor
5 Soap dispenser 800 to 1 000 mm above floor
6 Towels or dryer 800 to 1 100 mm above floor
7 Waste bin
8 Toilet paper dispenser 600 to 700 mm above floor
9 Independent water supply
10 Small finger rinse basin 350 mm maximum projection

7.7 POSITIONING OF GRAB BARS, WATER SUPPLY AND OTHER ACCESSORIES IN TYPE B CORNER TOILET

f) Other Toilet Accessories and Fittings

- All other fittings viz. hand dryer, towel, soap dispensers, waste bins, hand-held shower etc. shall be set at a height between 800 mm and 1 100 mm from the floor (Figure7.7).
- Toilet paper dispensers on both folding grab rails for type A and for Type B, it shall be on the wall beside the water-closet. The toilet roll dispenser and hand water faucet shall be mounted below the grab bars and at not more than 300 mm from the front edge of the seat and at a height between 50 mm and 200 mm from the top of the water-closet seat.
- Cloth hooks shall be set at different heights, 900 mm to 1100 mm, and additionally at least one hook at 1 400 mm projecting not more than 40 mm from the wall.
- Light switches shall be fixed inside all accessible toilet cubicles or the lighting shall be automatically switched on when someone enters the room. Timed light switches shall be not be installed or used.
- If a sanitary bin is supplied, it shall be reachable from the water-closet. Sanitary bins with non-touch opening devices are preferred.
- Non-touch soap dispensers are preferred.
- Mirrors and lights shall be so placed to avoid confusion and dazzling for visually impaired users.

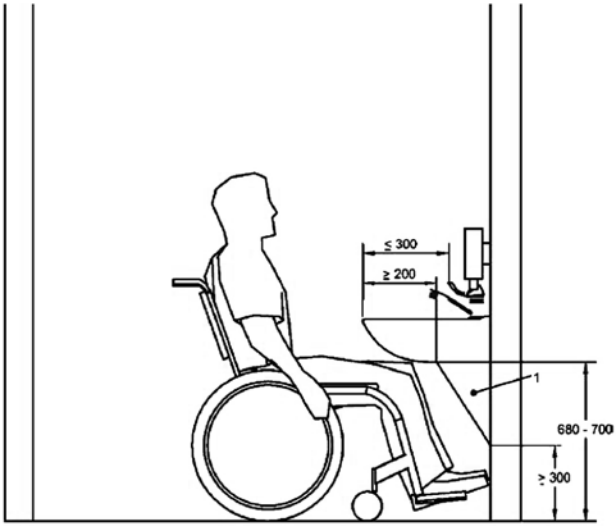

Key
1 Concealed piping

7.8 Washbasin with Knee/ toe clearance

g) Urinals

- When wall hung urinals are fitted in the washroom, it is recommended that at least one of these have its rim set at a height of 380 mm for wheelchair users and at least one has its rim set at a height of 500 mm for standing users/ambulant disabled. When installed, both shall be equipped with a vertical grab rail. Urinals shall be minimum 360 mm deep measured from the outer face of the urinal rim to the back of the fixture.
- This wall hung urinal shall be set clear above the floor level, without any raised access platform and with a clear floor area in front of the urinal of at least 760 mm wide and 1 220 mm deep to allow forward approach for ambulant disabled and minimum of 900 mm ×1 350 mm for wheelchair users to use the urinals(Figure 7.9). The colour of Urinals shall be contrast with the wall to which they are attached.

h) Alarm

- An assistance alarm, which can be reached from changing or shower seats, from the WC and by a person lying on the floor, shall be provided in all accessible toilets and accessible sanitary rooms which shall be connected to an emergency help point, or where a member of staff can assist.
- Visual and audible feedback shall be provided to indicate that, when the alarm has been operated, the emergency assistance call has been acknowledged and action has been taken.
- One set of alarm shall be provided at a height between 800 mm and 1 100 mm and the other at 100 mm above floor level.

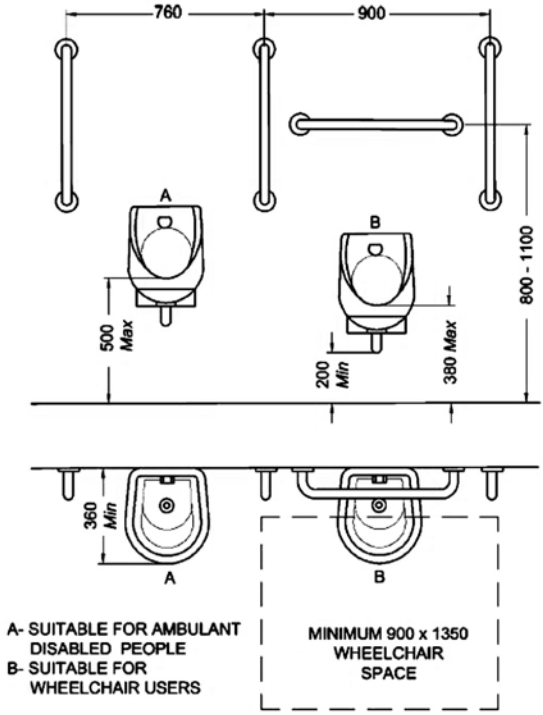

NOTE — Urinals shall be minimum 360 mm deep measured from the outer face of the urinal rim to the back of the fixture. Space below the urinal set for wheelchair users should be kept free of pipework up to a height of 200 mm above floor and up to a depth of 360 mm from the outer face of the urinal rim.

7.9 Clear Floor space and Mounting height for urinals

i) Emergency Warning Alarm

- A visual emergency alarm shall be provided to alert people who are deaf or hard of hearing in the event of an emergency.

7.4 Shower and changing room

a) General

- Shower and changing rooms shall be used by people with different disabilities and supporting aids etc. using their own wheelchair or special shower chairs and shall have level entry without fixed elements that prevent front and side access.

b) Shower/Changing Room Size and Space:

- A self-contained individual shower room or changing room shall have minimum interior dimensions of 2 000 mm × 2 200 mm (Figure 7.10 and Figure 7.11)

- A shower room incorporating a corner accessible toilet room shall have minimum interior dimensions of 2 400 mm × 2 500 mm (Figure 7.12). In such cases, the manoeuvring areas may overlap.
- The minimum clear floor space or wet showering area shall be900 mm × 1 350 mm, with a transfer area of 900 mm × 1 350 mm in the shower room (Figure7.13). If two or more shower recesses are provided, at least one shall have the seat on the opposite side.

c) Shower Seat

- The shower shall be fitted with a wall mounted, easily operable foldable seat that folds in an upward direction. Its minimum size shall be 450 mm × 450 mm, and when folded down, have its top surface set between 450 mm and 480 mm above finished floor and spaced a maximum of 45-50 mm from the rear wall.
- The shower seat shall be positioned such that the distance between the centre line of the shower seat and the adjacent wall is 450 mm to 480 mm, and the distance between front edge of the shower seat and the rear wall is 650 mm.

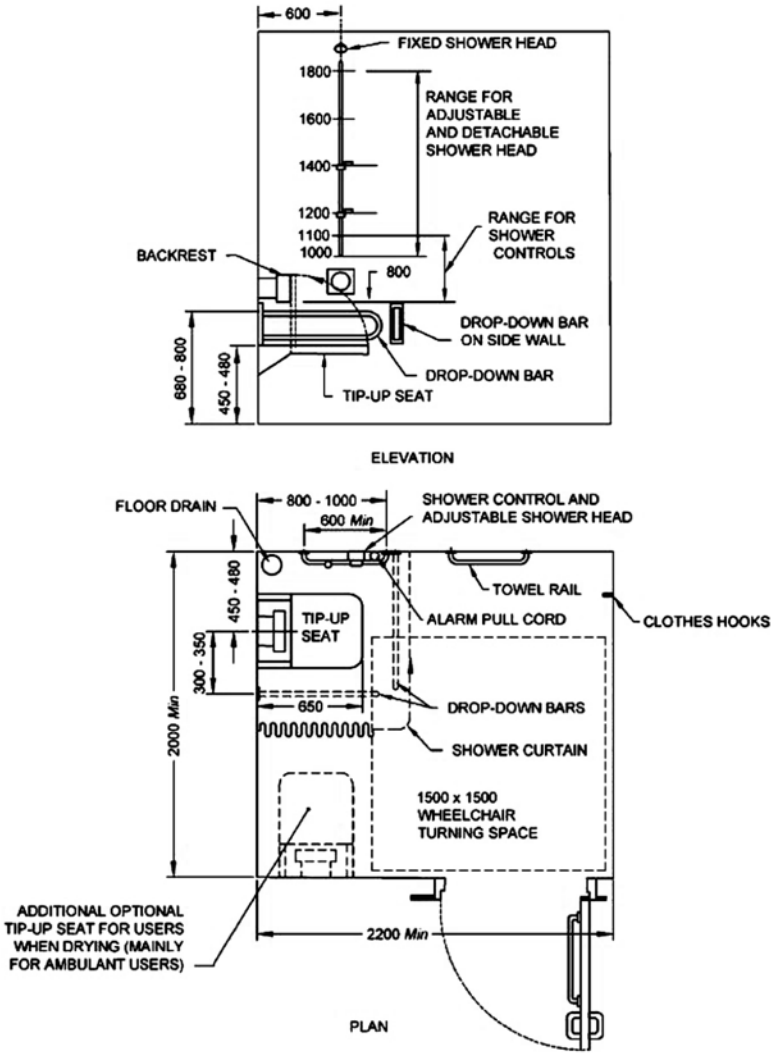

NOTE — Alarm pull cord, horizontal and vertical grab bars, shower curtain bar and towel rail not shown in elevation for clarity.

7.10 Self -Contained Shower Room for Individual Use

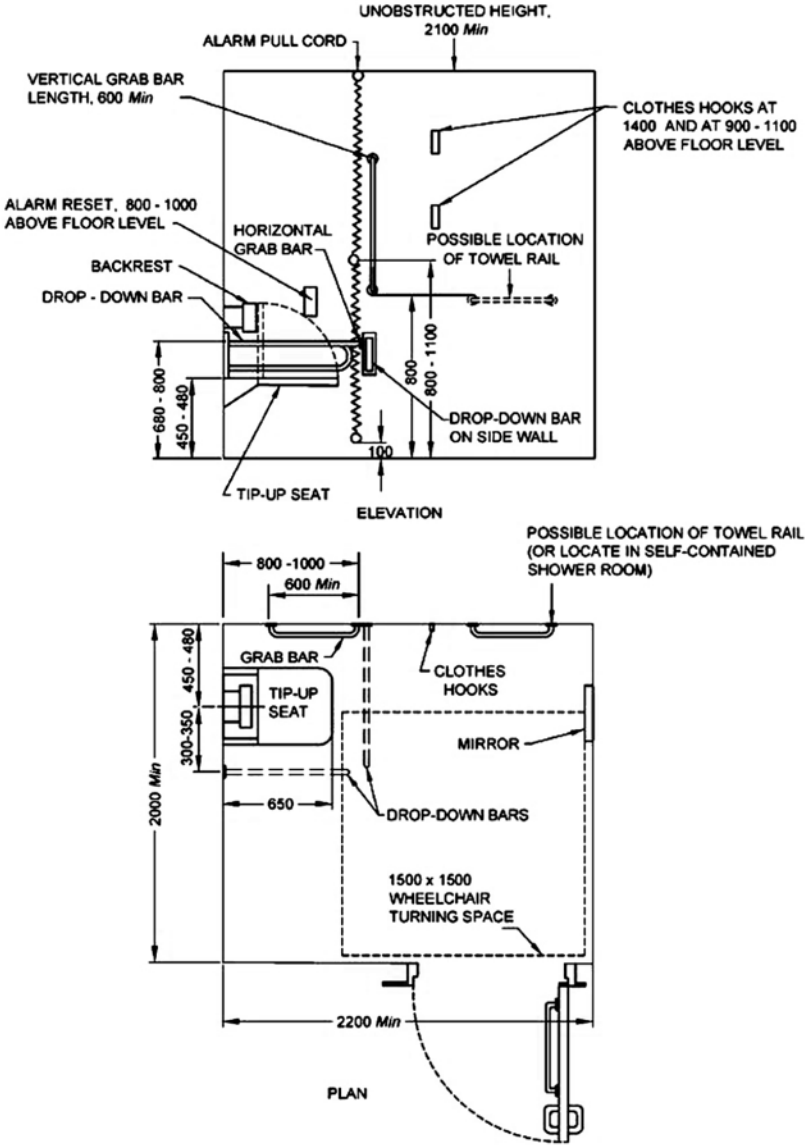

7.11 Self -Contained changing Room for Individual Use

d) Grab Bars for shower

Grab bars in shower shall be set as per Figure 7.12 and other details are in accordance with chapter 8-Railing and handrails. The shower area shall be fitted with at least one vertical grab bar which may hold the flexible shower head.

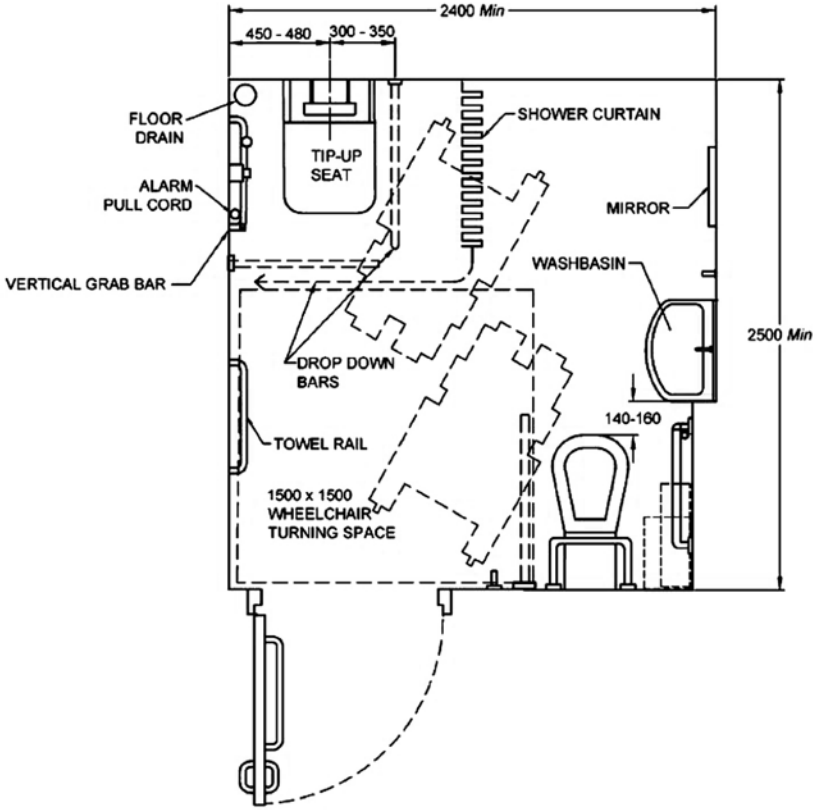

NOTES

1 Layout shown for right-hand transfer to shower seat and water closet.

2 The larger washbasin are set back 200 mm to maintain the correct relationship of its leading edge with the water closet.

7.12 Shower Room Incorporating an Accessible corner toilet for Individual Use

e) Stationary, Fittings and Accessories

- The length of the flexible (adjustable and detachable) shower hose (telephone shower/ handheld shower), shall be minimum1 500 mm. The handheld shower head should be provided between 1 000 mm and 1 200 mm above the finished floor. The shower hose fitting shall be a minimum 1 300 mm above floor level.

- Shower controls and folding seat shall be set according to Figure 7.13. The Controls shall comply with chapter-19 operating control devices. Assistance alarm(s) shall be provided in accordance with section 7.3 (i).

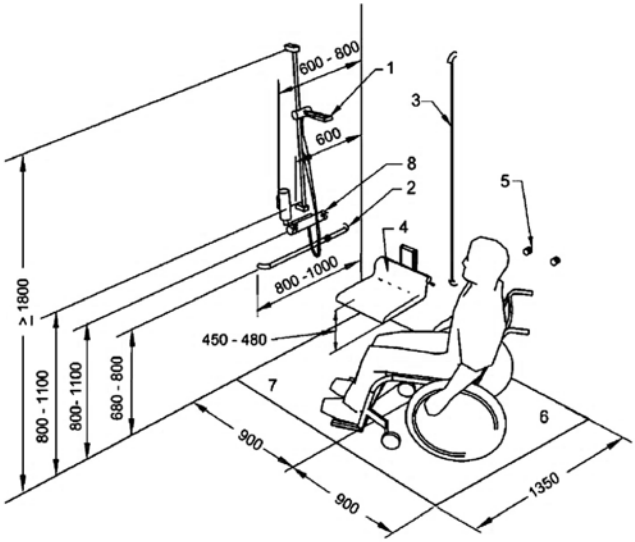

Key

1 Hand-held shower head
2 Horizontal grab bar
3 Vertical grab bar
4 Foldable shower seat
5 Towel hooks
6 Transfer area
7 Wet showering area with gradient 1 : 50 to 1 : 60
8 Shower controls

7.13 Example of shower place with grab rail, adjustable shower head and folding seat

CHAPTER. 8 Doors and Windows

8.1 Scope

In a built environment, doors and windows shall be design to enable all users to enter, control opening and leave any room unaided or without undue difficulties.

8.2 Door

a) General

Doors shall be designed taking into consideration all aspects of universal accessibility. The accessible provisions that have to be adhered in term of doors are door openings, door handles, manoeuvring space, door hardware, threshold etc.

b) Design Requirements

The minimum clear opening of doorways shall be 900 mm, measured between the face of the door and the face of the door stop with the door open at 90° as illustrated in Figure 8.1 Minimum Clear Opening of Doorways

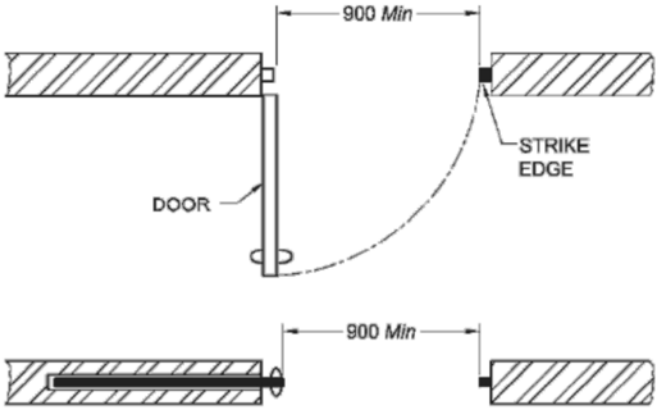

Figure 8.1 Minimum Clear Opening of Doorways

- If the door has two independently operated door leaves, at least one active leaf shall have a minimum clear opening of 900mm.
- Wherever revolving doors or turnstiles are installed, they shall be with an alternate side-hung (swing type) door with 900 mm minimum clear opening width.
- Toilets/washroom doors shall swing out/shall be two way opening type.
- Sliding or folding doors shall be provided for easy operation and for wheelchair to manoeuvre.
- Automatic doors shall have a push button system for their opening (Figure 8.5)

- Warning blocks shall be provided 300 mm before all entrances doors.
- Doors which open into corridors or circulation areas shall have contrast colour by a 25 mm wide high-contrast strip at the leading edge of doors on both sides.
- Low-hanging door closers which protrude hazardously into corridors or traffic ways shall be avoided.
- All glazed doors shall have contrasting frame with manifestations in a contrasting colour. Automatic door closure devices shall be used so that doors are fully open or completely closed.
- Automatic doors shall have horizontal or vertical sensing devices, guard rails, power floor mats, push or kick plates. The doors shall remain fully open until cleared by the user.

c) Fixing Requirement

Doors shall not be too heavy, not requiring a force of more than 22 N to operate.

d) Manoeuvring Space at Doors

In narrow spaces, sliding doors is preferable. A minimum distance of 600 mm shall be provided for wheel chair users to manoeuvre, beyond the leading edge of door. (Figure 8.2 & 8.3). The manoeuvring spaces shall be free of any obstructions and shall be provided as shown in fig below.

a) Minimum space of 600 mm on the pull side.
b) Minimum space of 300 mm on the push side.
c) Minimum space of 300 mm for two-way swing door.

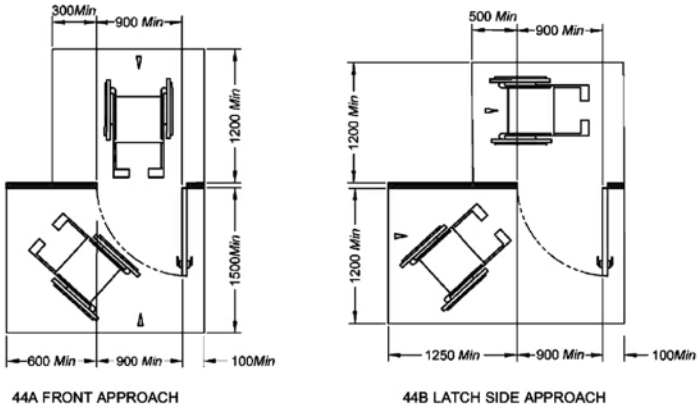

Figure 8.2 Maneuvering Space at Doors

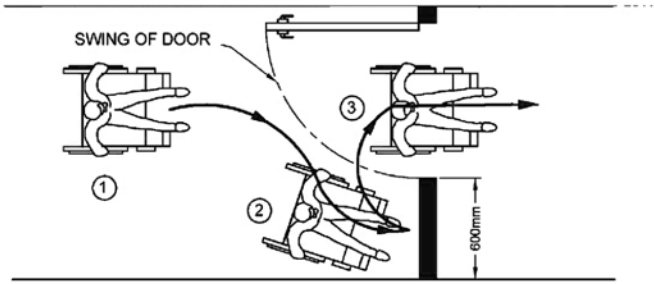

Figure 8.3 Maneuvering Space at Doors

e) Two Doors in Series

The minimum space between two hinged or pivoted doors in series shall be 1500 mm in addition to the width of the door swinging into that space, as shown in Figure 8.4

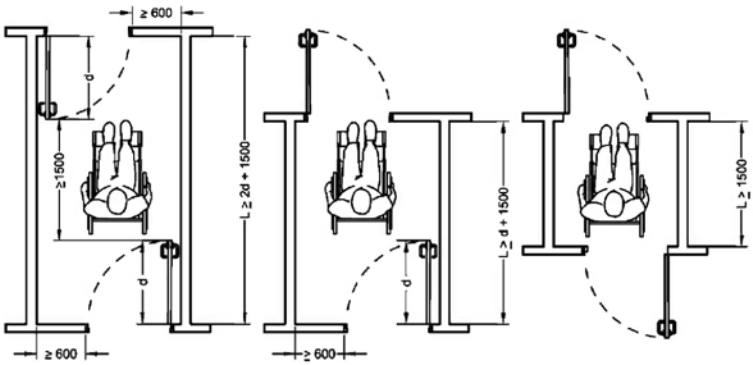

Figure 8.4 Space between two hinged or pivoted doors in series

f) Door Hardware/ Accessories

All operable devices like handles, pulls, latches and locks shall meet the following requirements:

1) They shall be operable by one hand. Fine finger control, tight grasping, pinching or twisting to operate shall not be provided.
2) They shall be mounted at a height of 850 mm to 1100 mm from the floor finish (Figure 8.5, 8.6, 8.7).

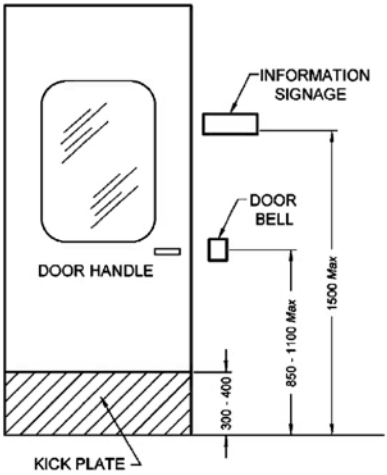

Figure 8.5 Location of Door Hardware

3) All door fixtures shall have contrast colour with the surface of the door.
4) The fixing and design of latch and push/pull handles shall be consistent throughout the building.
5) The doors shall have a horizontal handle, provided on the closing face of the door, approximately 760 mm above the floor.

g) Door Handles

The following mechanisms shall be followed for door handles:

a) Push-pull mechanisms that require no grasping;
b) Provision of Lever handles on latched doors;
c) Provision of D-shaped handles to reduce the risk of catching on clothing, or injuring from the exposed lever end (Figure 8.6, 8.7).
d) Door knob shall not be provided.

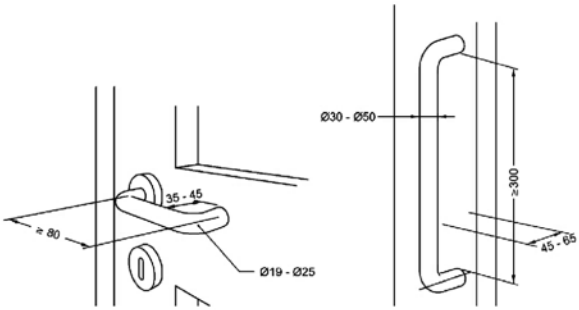

Figure 8.6 Lever and Vertical Door handles

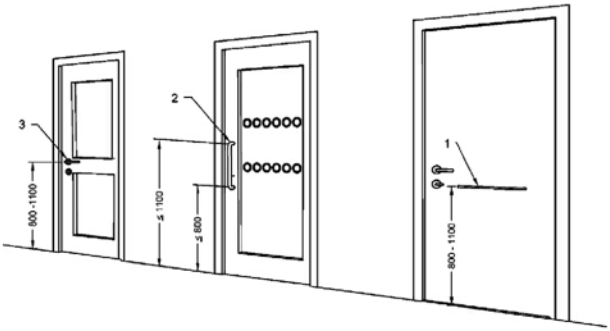

Key
1 Horizontal pull bar, toilet room door
2 Vertical handle
3 Lever type handle

Figure 8.7 Types of door handles and heights

h) Door Thresholds

Thresholds shall not be provided. If thresholds are unavoidable, they shall not exceed 12 mm and those exceeding 5 mm shall be bevelled and contrast visually with the adjacent floor. A minimum difference in LRV of 30 points compared to the floor shall be provided.

i) Sliding/Folding Doors

Operating hardware shall be exposed and usable from both the sides when the doors are fully open.

j) Door Closures

The sweep period of the door shall be so adjusted, so as from an open position of 90°, the door does not take less than 3 s to move to a semi-closed position.

k) Vision Panel

All two-way swing doors or doors in general circulation areas shall be provided with vision panels at a height of 800 mm to 1500 mm from the floor (Figure 8.8).

This will enable both the wheelchair user and the ambulatory differently abled to be noticed by a person on the opposite side in order to prevent him/her from being accidentally struck by the door.

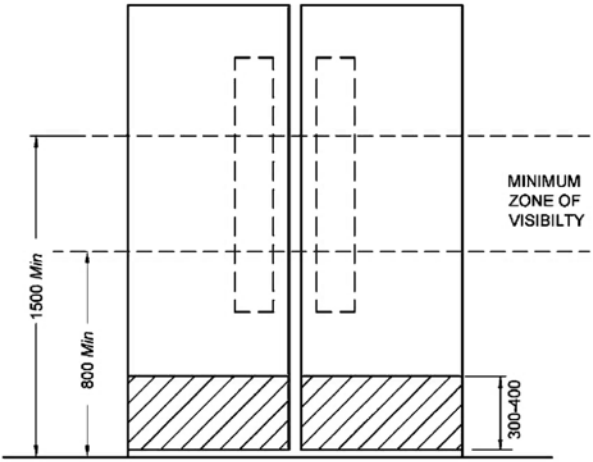

Figure 8.8 Vision Panel

l) Kick-Plate

Kick-plates of not less than 300-400 mm height shall be provided for doors in high-use in order to protect the push side of doors from damage (Figure 8.8).

m) Door Identification

To help people with impaired sight to see doors, the door and frame shall be in a colour which contrasts with the adjoining wall. The door shall not be of a highly polished/reflective material such as stainless steel.

n) Glass Doors

The presence of a glass door shall be made apparent, with permanent uninterrupted visual manifestation by a 75 mm wide high-contrast strip at hand level and eye level, within 800 mm to 1000 mm from the floor and within 1400 mm to 1600 mm from the floor. The edges of a glass door shall also be apparent when the door is open. An additional visual manifestation placed at a height of 100 mm to 300 mm shall be provided (Figure 8.9).

Visual manifestation consisting of two separate colours with a minimum difference in LRV of 60 points shall be provided to enable lighting conditions and backgrounds.

Where a glass door is adjacent to, or is incorporated within, a fully glazed wall, the door and wall shall be clearly differentiated from one another, with the door more prominent. The door may be framed on both sides and also on the top by an opaque high-contrast strip at least 25 mm wide.

Glass that is silvered or highly reflective shall be avoided. Any free-standing edges of glazed screens shall have a strip contrasting visually with the surroundings.

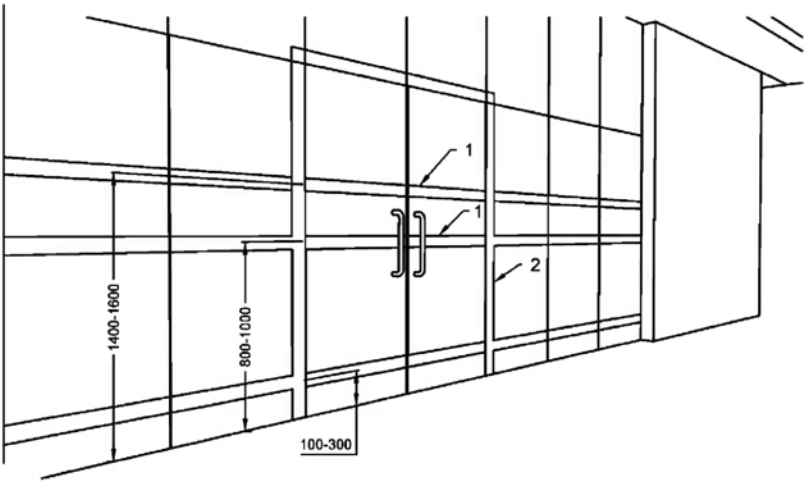

Key

1 Visual marking (manifestations), minimum width 75 mm, two separate colours with a minimum difference in LRV of 30 points

2 Visual marking on door frame, minimum width 50 mm

Figure 8.9 Permanent Manifestation on Glass Door

8.3 Windows

The windows shall meet the following general requirements (Figure 8.10):

Design requirement

a) Windows shall have handles/controls.

b) Unobstructed viewing zone shall be provided at a height of 600 mm and 1400 mm.

c) Curtain or venetian blind controls/ropes shall be provided at a height of 800-1000 mm from the finished floor level.

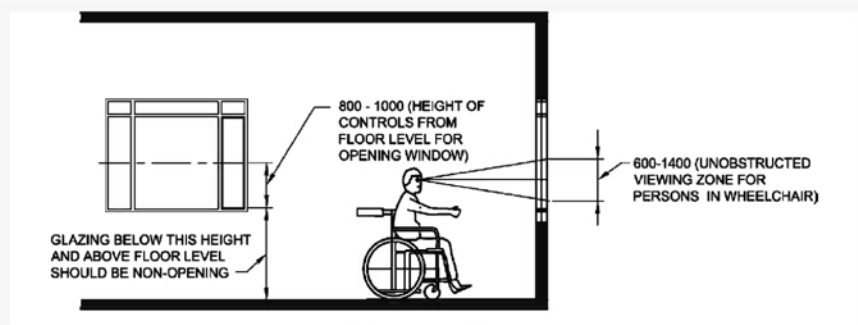

Figure 8.10 Requirement for Windows

CHAPTER. 9 Handrails and Grab Bars

9.1 Scope

These are the support elements provided in a building. For accessibility requirements, these should be designed to have firm grip and support.

9.2 Handrails

General: Handrails/grab bars shall be designed for easy to grasp and to provide a firm and comfortable grip along the rail without obstruction. Handrails /grab bars are required for balance or to prevent serious falls. Handrails aid in locomotion and mobility for with visual impairments and as a support for persons with mobility impairments. The handrail/grab bars shall be securely fixed to the wall. The colour of the handrail/grab bar shall be in contrast with the wall behind.

a) Handrail Requirements

General and Design requirement (Figure 9.1)

It shall:

a) Be slip-resistant with round ends;
b) Have a circular section of 38-45 mm in diameter;
c) Be free of any sharp or abrasive elements;
d) Have continuous gripping surfaces, without interruptions or obstructions that may break a hand hold;
e) Have colour in contrast to the wall behind.

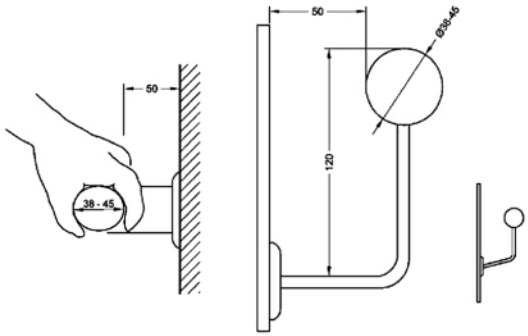

Figure 9.1 Handrails

b) Fixing requirements

They shall be securely fixed and rigid and the fastenings and the materials shall withstand a minimum point load, both vertical and horizontal of 1.7 kN.

c) Specific requirements

a) They shall be provided with Braille at the beginning and at the end to give information to people with visual impairment. Tactile markings shall also be provided on the floor at both places as above. For stepped path, stairs and ramps, it shall be continuous and provided on both sides. (Figure. 9.2, 9.3).

b) They shall extend at least 300 mm beyond the first and last nosing. They shall not project into a circulation area unless it is continuous and intended to form guidance along that path. Horizontal extension at the end shall be turned towards the wall on the closed side of the ramp or stairs, and turned down and terminate at the floor or ground level.

c) A clear space of 50 mm shall be provided between wall and the handrail.

d) The height at the top of a handrail shall be between 850 mm and 950 mm above the pitch line of a stair, surface of a ramp, and the surface of a landing. A second handrail, with a lower profile than the first one, shall be provided at a height of 650 mm and 750 mm above the pitch line of a stair, surface of a ramp, and the surface of a landing. A minimum distance of 200mm between the two handrails shall be ensured.

e) The recess shall extend at least 450 mm above the top of the rail where the handrail is enclosed in a recess.

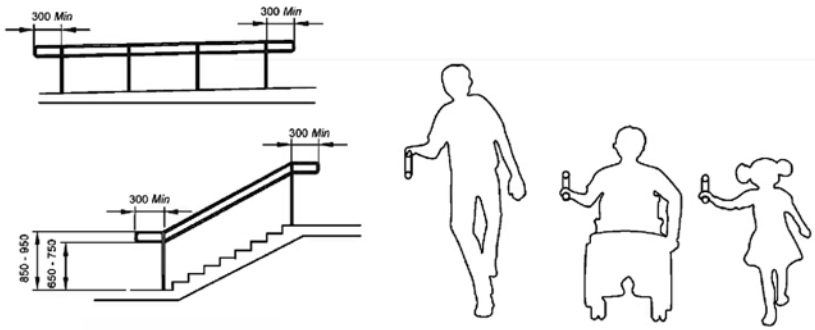

Figure 9.2 Handrail for Steps and Stairs Handrails Handrails at two levels to help Children and people with short stature

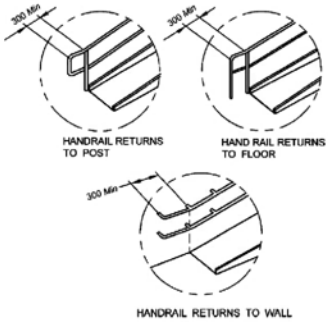

Figure 9.3 Typical Handrail extensions

9.3 Grab Bars

a) Design requirements

They shall

a) be slip-resistant with round ends preferably have knurled surfaces;
b) Have a circular section of 38-45 mm in diameter;
c) be free of any sharp or abrasive elements;
d) Have a minimum clear space of 50 mm to 65 mm from the wall;
e) be installed at a height of 700 mm to 900 mm;
f) have contrast colour with the wall/surface behind.

b) Fixing Requirement

They shall be securely fixed and rigid; the fastenings and the materials shall withstand a minimum point load, both vertical and horizontal of 1.7 kN.

CHAPTER. 10 Accessible Bedrooms in Non-Domestic Buildings

10.1 General

Rooms accessible for wheelchair users shall be designed for two beds. Free space on at least one of the long sides of the bed shall be provided. Sufficient clear manoeuvring space is needed to gain access to facilities, including the shower. Visual and audible alarm systems shall be accessible to warn people with visual and hearing impairments.

10.2 Design Requirements:

If a single bedroom accessible for wheelchair users is provided, a queen size bed is preferred, 1500 mm width × 2000 mm length. This space shall be 1 500 mm, and shall not be less than 1 200 mm (Figure 10.1). At the foot of the bed, at least 1 200 mm is required (Figure 10.1 and Figure 10.2). There shall be a bench for luggage at a height between 450 mm and 650 mm (Figure 10.3). The minimum height of a bed shall be between 450 mm and 500 mm, when it is compressed under a 90 kg weight.

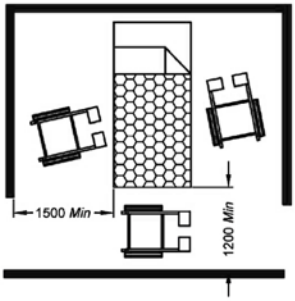

Figure 10.1 Space around Bed

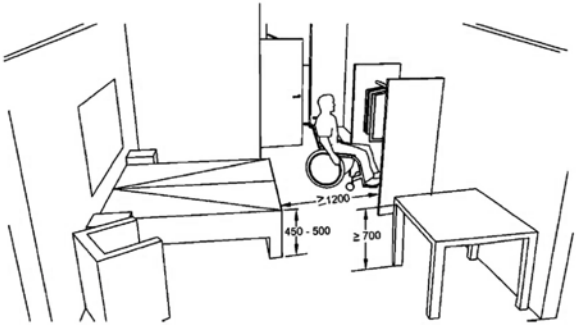

Figure 10.2 Example of space allowances for Accessible Bedroom

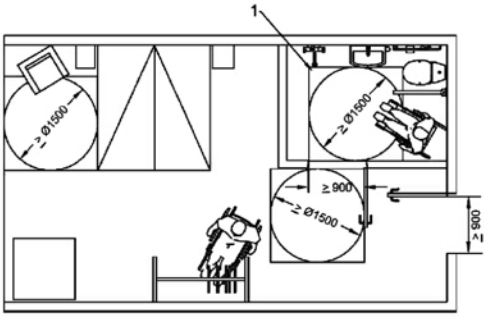

Key
1 Shower area

Figure 10.3 Example of Space allowances for Accessible Bedroom and Toilet/Sanitary room

CHAPTER. 11 Kitchen and Storage Areas

11.1 General

Manoeuvring space, slip resistant walking surface and accessible height of controls and devices shall be taken into account for general design consideration. Floor surface shall allow for easy wheelchair manoeuvrability. Essential kitchen appliances (oven, refrigerator, etc.) shall be usable by persons both standing and sitting in a wheelchair, and a worktop shall be located beside all appliances. The sink taps shall be reachable and easy to operate with one hand. The sink shall be reachable for a wheelchair user. If a knee recess is provided under a sink, its underside shall be insulated. For people with ambulatory disabilities, stools (preferably with the back and foot rests) shall be provided strategically at main work area.

a) Design Requirements:

a. Wheelchair turning radius of at least 1 500 mm shall be provided between the counter and the opposite walls.
b. Counter tops shall be between 750 mm and 800 mm in height and provide for clear knee space for a wheelchair user.
c. The clear knee space for a wheelchair user is at least 900 mm wide, 480 mm deep and 680 to 700 mm high (Figure. 11.1 and Figure. 11.2).
d. Counter tops/slabs shall have rounded edge.
e. All surfaces shall be smooth to facilitate sliding of heavy items from one area to another.
f. Slide-out working spaces are useful in providing an over-the lap working surface.
g. A section of the shelves shall be within reaching distance for a wheelchair user, between 300 mm and 1100 mm above floor surface.

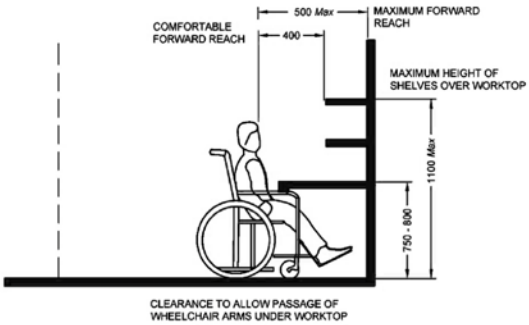

Figure 11.1 Requirement for Counter Top

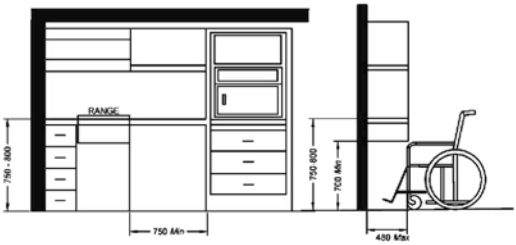

Figure 11.2 Kitchen Shelves and Cabinets

11.2 Storage Areas

The minimum manoeuvring space and reachy for wheelchair users shall be taken into consideration when designing and constructing a storage area. Part of the shelves shall be within reaching distance for a wheelchair user, between 300 mm and 1 100 mm above the floor. If a door is provided, it shall open outwards.(Figure 11.3)

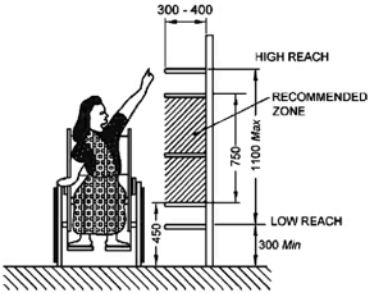

Figure 11.3 Storage Space

CHAPTER. 12 Drinking Water Facility, Telephone, Mailbox, Vending machine, Card access, ATM, Dispensing Machine

12.1 Telephones & Public Telephones

a) General

Public telephones shall be located beside the access route and shall be easily detectable by people with vision impairments. Where more than one public telephones are provided, at least one phone shall be accessible. All information shall be provided in at least two of visual, oral and tactile forms. The telephone keypad shall have a tactile point on the number five.

Telephones shall be on a clear accessible route with approach from the front or the side (Figure. 12.1).

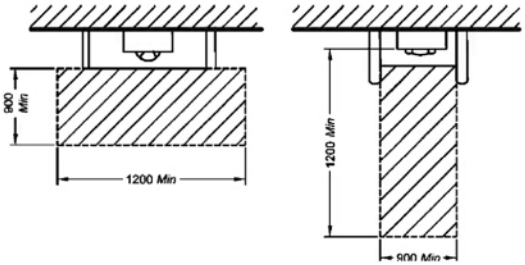

Figure 12.1 Space allowance for a Wheelchair user for using Telephone

b) Design Requirements:

a. A clear knee space of minimum 700 mm in height and minimum 600 mm in depth and 900 mm in width shall be provided (Figure. 12.2).
b. Counter tops provided shall be between 750 mm and 800 mm from the floor. The depth of the counter top shall not be less than 480 mm.
c. The height of all operable parts of the telephone shall be between 800 mm and 1100 mm.
d. The minimum length of the telephone cord shall be 900 mm.
e. The international symbol of accessibility shall be displayed to identify the location of such telephones.
f. If a public telephone is provided in an enclosed booth, the opening of the booth shall have a clear width of at least 900 mm. The enclosed space shall have clear unobstructed dimensions of at least 900 mm × 1200 mm, which shall not be restricted by fixed seats.

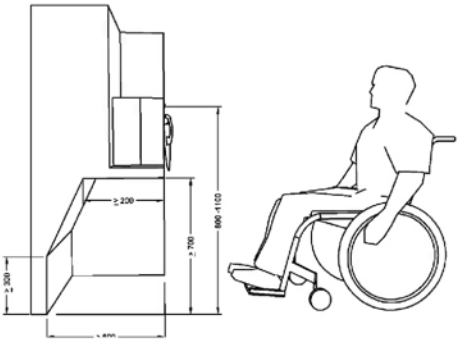

Figure 12.2 Height of Telephone controls for Wheelchair users

12.2 Mailbox/Dropbox

The mail/drop box slot shall be located at the height of maximum 1200 mm with clear floor space of 900 mm × 1 200 mm.

12.3 Vending Machine, Card Access, Dispensing Machines and Automatic Teller Machines (ATMs), etc

a) General

Machines for dispensing money, tickets or small goods shall be located on accessible level and the operation of the machine shall be easy to understand.

b) Design Requirements:

The approach to dispensers shall be minimum 900 mm wide and a knee space of minimum 700 mm in height and minimum 600 mm in depth and 900 mm in width shall be provided (Figure. 12.3).

The clear area in front of the machine shall be at least 1500 mm × 1500 mm, to allow the user to approach the controls sideways, and to turn around after use and to provide some privacy.

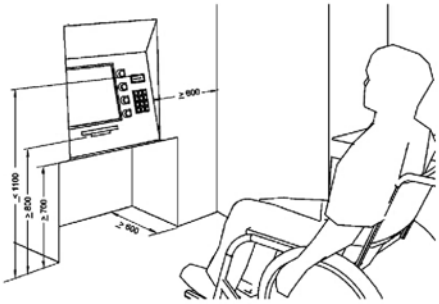

Figure 12.3 Example of Vending machine

12.4 Drinking Water Facility

a) Design Requirements:

a) Wall/Post-mounted cantilevered units shall have a clear floor space of at least 900 mm × 1200 mm as shown in (Figure. 12.4).

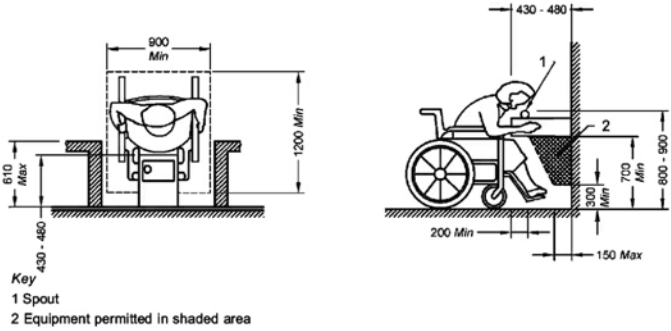

Figure 12.4 Clear floor space and knee space requirement for a wall/post mounted Drinking water unit

b) The front edge of the unit shall extend 430-480 mm from the wall. It shall have a clear knee space between the bottom of the apron/ equipment and floor or ground of at least 900 mm wide, 200 mm deep extending from the front edge of the equipment to back towards the wall, and 700 mm high. It shall have a toe space not less than 900 mm wide, 300 mm high, extending from the back wall to a maximum of 150 mm (Figure. 12.4).

c) Freestanding or built-in-drinking water units shall have a clear floor space of at least 1200 mm wide × 900 mm as shown in (Figure. 12.5).

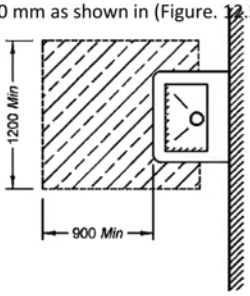

Figure 12.5 Clear floor space for freestanding or built in Drinking water unit

d) The maximum distance of the spout from the front edge of the drinking water facility shall be 125 mm. Spout heights shall be between 800-900 mm, from the floor to the spout outlet.. A minimum 100 mm space below the spout outlet shall be provided to allow for the insertion of a cup or glass. Where only one is provided, it shall be at a height of 700 mm above floor level

e) Controls shall be centrally positioned at the front of the unit or, if at the side, on both sides, not more than 180 mm from the front. Control shall be easily operable with one hand with an operative force.

CHAPTER. 13 Auditoriums, Concert Halls, Sports Arenas and similar seating, conference rooms and meeting rooms

13.1 Scope

This chapter deals with mandatory accessibility provisions specifically for auditoriums, concert halls, sports arena and similar areas.

13.2 Wheelchair spaces:

- A Minimum of four wheelchair spaces shall be provided at spectator level in the auditorium.
- Two wheelchair spaces shall be provided for every 400 seats or part thereof. (For example: there shall be at least 6 wheelchair spaces for 900 fixed seats).
- The spaces shall be grouped in pairs (i.e., not less than two) and also not separated from the seats of other audiences.
- Each wheelchair space should have unobstructed line of vision to the stage areas and be of minimum size of 800mm x 1300mm, with the side of 800mm facing towards the stage or podium (Figure 13.1 Wheelchair space in Auditorium.
- Readily removable seats can be installed in wheelchair spaces when the spaces are not occupied by wheelchair users.
- At least 1 % of seats shall be designated as seating areas for wheelchairs users, with a minimum of two. From 51 seats up, it is recommended to rate the designated seating areas this way: total seats 51 to 100, minimum three designated seating areas for wheelchair users;— total seats 101 to 200, minimum four designated seating areas for wheelchair users;— one additional seating area should be provided for every two hundred additional seats or part thereof.—These spaces should be integrated among other seats and allow two wheelchair users to stay together.
- It is recommended that the armrest on the seats at the end of the row lift up to allow people to transfer from the wheelchair onto a seat.
- To accommodate groups of wheelchair users, in an auditorium with fixed seats, a minimum of 15 seats shall be foldable or removable to increase the number of designated areas for wheelchair users when necessary. Some seats should be wider in order to allow larger size people to sit properly.

13.3 Rows and Seat Numbers:

- The seating areas of an auditorium and the stage and backstage facilities, shall be provided with safe and convenient access for all people.
- The row and seat numbers should be legible to people who have impaired vision. They should be tactile, of adequate size and have enough visual contrast to the background on which they are mounted.

13.4 Accessible Changing Rooms:

- The minimum number of accessible changing rooms should be provided depending on the type and use of the building. In the event that changing rooms are provided alongside a toilet area, these should comply with the specifications given in Chapter 7.
- A fixed bench should be set at a height of 450 mm to 480 mm above floor level. The bench should be no less than 500 mm wide, 2 000 mm in length, and be provided with a grab bar at a height of 700 mm to 800 mm with a clearance of between 50 mm and 65 mm from the wall.
- A clear space of 1 500 mm × 1 500 mm shall be beside the bench.
- Coat hooks should be set at different heights, 900 mm to 1 100 mm, and additionally at least one hook at 1 400 mm. Coat hooks, benches, locker handles and other furnishings should offer good colour and tonal contrast to their backgrounds. Non-slip floor surfaces should be used, and good lighting as well as matte finished surfaces and furnishings should be provided.
- An alarm/call bell/switch may be provided as per provisions in Chapter 19
- Changing rooms shall have a minimum area of 4 Sq. Mtrs.

13.5 Viewing spaces in assembly areas:

Refer Figure 13.2

a) Floor Area:

- The floor area for a wheelchair viewing space shall be connected to an accessible path of travel and shall meet the following requirements (Refer Figure 13.1):
- It shall be at least 900 mm × 1 400 mm;
- The depth of the row shall be minimum 2400 mm;
- It shall have clear and level surface;
- It shall have sufficient manoeuvring space;
- Spaces for several wheelchair users shall be provided. They shall be located beside regular
- seating rows, for the wheelchair user to be able to stay by his/her accompanying person, if
- relevant; and
- It is recommended that the armrest on the seats at the end of the row (aisle seats) lift up to

b) Sight Lines (Refer Figure 13.3):

Wheelchair user viewing spaces shall provide viewing spaces that are,

- Comparable to those for all viewing positions with a minimum unobstructed eye level up to 1200 mm; and
- Not reduced or obstructed by standing members of the audience. Row and seat number identification signs shall be legible to persons who are visually impaired (Refer Chapter 19)

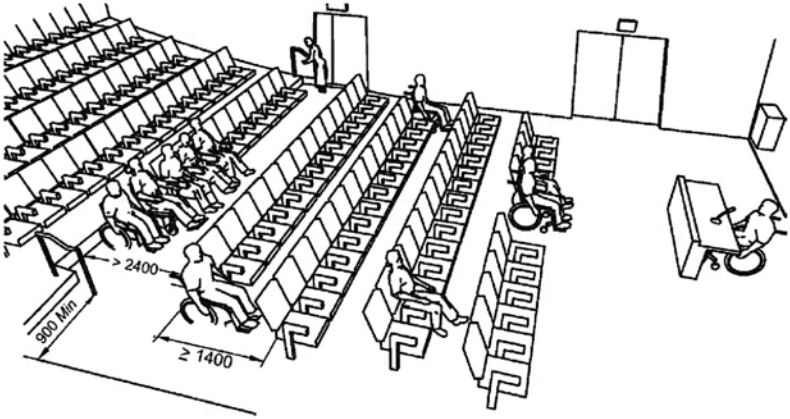

Figure 13.2 Viewing Spaces for Wheelchair User

c) Lighting for Sign language Interpretation:

Adequate provision should be made to facilitate sign language and lip reading. Lighting on the faces and hands of presenters and people signing should be provided at an angle of 45° to 50° from horizontal at ceiling level for people with a hearing impairment to be able to read the presenter's lips and the signer's lips and hands.

A suitable contrasting backdrop should be provided, to assist in reading the presenter's lips and hands.

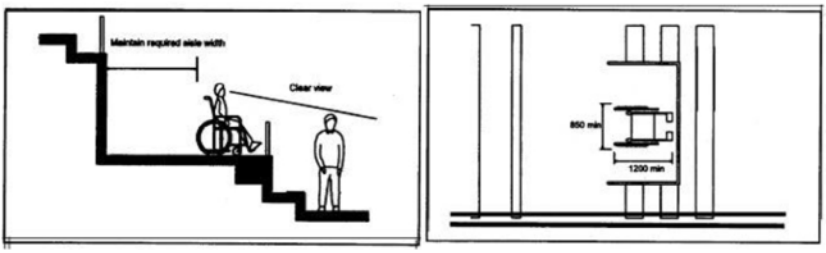

Figure 13.3 Sight Line and Wheel chair position

CHAPTER. 14 Accessible Housing

14.1 Route of Entry

- ·Shall have hard, non-slip and even surface;
- ·Shall be free of loose gravel;
- ·Shall provide continuing common surface not interrupted by steps or sudden changes in level and other obstructions such as manhole covers, light or telephone poles;
- ·Shall be marked with signage in Braille and visual signage at appropriate height to indicate the shopping area, apartment blocks, bus stop, taxi stand, etc.;
- ·Shall be there if there is more than one entry to the dwelling, the most accessible one should be selected considering proximity to the driveway, most level walking surface, height of stairs and available handrails;
- Shall the driveway provide easy access to the home by means of a walkway that is level and free of cracks and uneven surfaces. For details regarding accessible parking refer to Chapter 3.
- Shall conform to appropriate stairs accessibility standards and be provided with handrails conforming to Chapter 6.
- ·Shall consider if a ramp is to be installed, it should conform to Chapter 4.

14.2 Entrance:

- Entrance should be well lit and be provided with an adequate cover from adverse weather conditions.
- For wheelchair users, the entrance should have a platform of at least 1500mm ×1500 mm. This will enable the person to rest and prepare for entry.

14.3 Interior:

a) Furniture Arrangement:

- Sufficient room should be made available for manoeuvring a wheelchair (at least 1500 mm turning radius) or ambulating with an assistive device such as a walking frame or a white cane;
- Clear passage should be allowed from one room to the next;
- Unrestricted access should be provided to electrical outlets, telephones and wall switches;
- All controls and operating mechanisms should comply with Chapter 19; and
- A clear floor space for the wheelchair, of at least 900 mm ×1200 mm should be provided in front of all the utilities and furniture.

b) Floor Surface:

Floor surface should be stable, firm, level and slip-resistant and preferably matt finish and should not have any projections, drops, or unexpected variation in level. Also:

- Complex patterns should be avoided.
- Floor patterns that could be mistaken for steps, for example stripes, should not be used for floors in corridors.
- Floors should be levelled. If this is unavoidable, the slope of floors should be no greater than 1:20. If greater, floor should be designed as ramp.
- For people with low vision, lines of brightly coloured tape may be placed on the floor surface to assist mobility in poorly lighted areas.
- Where carpets are used in circulation area, they should:

- Be securely fixed
- Have firm cushion, pad or backing;
- Have exposed edges of carpets fastened to floor surface and trim along the entire length of the exposed edge.

c) Doors:

- Should comply with Chapter 8;
- Should have handles complying with Chapter 8;
- Knurled surface door handles should be used on interiors of dwellings frequented by people with visual impairments. These abrasive, knurled surfaces indicate that the door opens to a hazardous area and alerts the individual to danger.
- Glass doors should be marked with a bright coloured motif at eye level to aid people with low vision.

d) Stairs:

- Should comply with Chapter 6.
- Should be well lit.

e) Bedrooms (Refer Figure 14.1):

- The bedroom should be planned to provide a 1500 mm turning in space for wheelchair, at least near all the doors.
- There should be a clear floor space of at least 900 mm ×1200 mm in front of all furniture.
- Bed for a wheelchair user should:
  - Have a height of 450-480 mm from the floor surface;
  - Be stable. Stability may be improved by placing the bed against a wall or in corner of the room (except for when the wheelchair user plans to make the bed); and
  - Be positioned to provide at least a 1500 mm turning in space at the transfer side
  - A bedside table or cabinet between 450 mm and 900 mm from the floor may be useful to hold a lamp telephone, necessary medications and a call bell if assistance is needed.
  - Wall hook installed at a height of 1100 mm to 1300 mm may be a useful addition to the closet area.

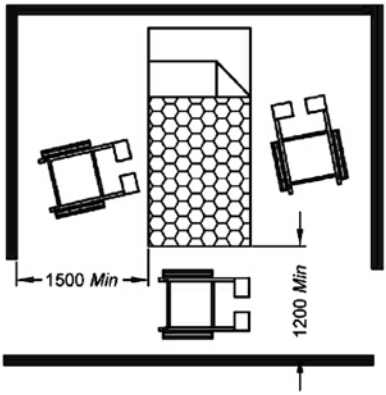

Figure 14.1 Accessible Bed room

- The closet should:
  - Have a clear floor space of at least 900 mm × 1200 mm;
  - Have the clothes bar at a height of 1200 mm from the floor;
  - Have shelves installed at various levels between 300 mm and 1150 mm form the floor surface;
  - Have door handle conforming to Chapter 8.

f) Living rooms:

- At least 1500 mm turning in space for wheelchair should be provided near all entry points to the living room.
- A living-dining combination is preferable to a kitchen-dining combination (except when the wheelchair user does the cooking).
- The seating space for a wheelchair user at the dining table should provide a clear knee space. The clear knee space for a wheelchair user is at least 900mm wide, 480 mm deep and 750 mm high.
- Floor surface should be firm, slip resistant and levelled.
- There should be a clear floor space for the wheelchair of at least 900 mm × 1200 mm in front of all the fixtures.
- Chair seat heights should not be less than 500mm.
- Controls and operating mechanisms should comply with Chapter 19.

g) Washrooms:

- Should comply with Chapter 7.

h) Kitchen:

- Wheelchair turning radius of at least 1500 mm should be provided between the counter and the opposite walls.
- Floor surface should allow for easy wheelchair manoeuvrability.
- Counter tops (Refer Figure 14.2):
  - Counter tops should be between 750 mm and 800 mm in height and provide for clear knee space for a wheelchair user.
  - The clear knee space for a wheelchair user is at least 900 mm wide, 480 mm deep and 750 mm high.
  - Counter tops/slabs should have rounded edge;
  - All surfaces should be smooth to facilitate sliding of heavy items from one area to another;
  - Slide-out working spaces are useful in providing an over-the lap working surface;
  - For people with ambulatory disabilities, stools (preferably with back and footrests) should be provided strategically at the main work area;
  - Shelves and storage spaces should be between 300 mm and 1200 mm height from the floor surface;
  - All controls and operating mechanisms should comply with Chapter 19; and
  - Any exposed hot-water pipes under the sink should be insulated to avoid burns.

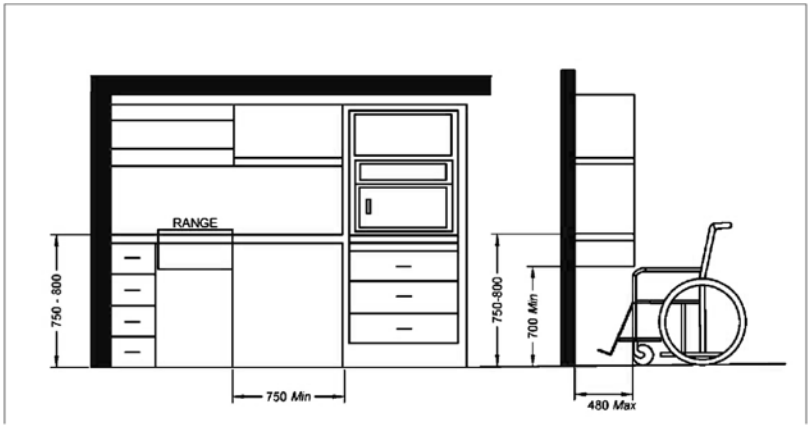

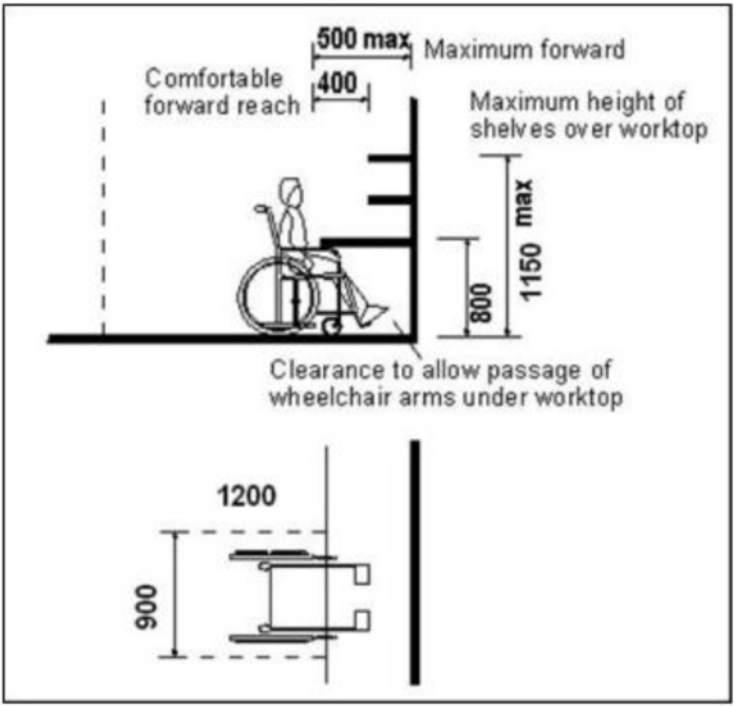

Figure 14.2 Counter Clearance

CHAPTER. 15 Lighting & Electrical Controls

15.1 Scope

For barrier free physical environment, lighting and electrical controls are covered in this chapter.

15.2 Lighting

a) General

Proper planning of artificial lighting is required for adequate visibility of the accessible facilities in and around a building by way of providing proper illumination level, uniform distribution of light free from glare and shadow and avoidance of excessive contrast. Lighting should also facilitate colour of the interior, tone and texture schemes and directional movement inside a building.

b) External Lighting

Artificial lighting around the building shall be enough for spotting any change of level or gradient. Ramps, entrances, steps, signage etc provided in the building should be well lit with a minimum illumination of 100 Lux. Lighting should also facilitate in way finding , tactile pathways and walkways etc. provided for barrier free access around the building. Building elements shall also be clearly noticeable during night time when natural lighting is poor or non-existent.

c) Lighting of the Parking Space, Walkways & Pathways

Lighting fixtures not exceeding a height of 4 m from ground level shall be provided. Light source provided shall have better colour definition and colour rendering effect for the benefit of people having poor eye sight. White lighting at average 35 to 40 Lux is recommended to ensure colour contrast of tactile blocks and to ensure visibility at night to persons with low vision. Light pole may be provided so as to have no obstruction to differently abled persons.

d) Lighting in Reception Areas

The reading and writing surfaces at counters, desks shall be illuminated to a level of at least 200 lux in the area, and on the desk in a range of 350 lux to 450 lux. To facilitate lip reading, lighting should provide even illumination.

e) Lighting on Stairs, Corridors and Maneuvering Zones

A minimum Illumination level of 150 lux shall be maintained on the stairs. In addition, the lighting on steps should be uniform, shadow free and without glare.
Similarly, lighting in the corridors and manoeuvring zones shall be even, diffused and without glare, reflections or shadows. Minimum illumination level at the corridor and manoeuvring zone shall be 100 lux.

f) Lift Car Lighting

Internal car lighting should provide minimum level of illumination of 100 lux at floor level. It shall be uniformly distributed. Spotlights shall be avoided.

g) Lighting in Auditoriums, Meeting Rooms, Concert Halls etc.

Besides adequate lighting requirement of such spaces, provision should be made to facilitate sign language and lip reading. Lighting on the faces and hands of presenters and people signing should be provided at an angle of 45° to 50° from horizontal at ceiling level for people with a hearing impairment to be able to read the presenter's and the signer's lips and hands. Lighting conditions that support lip reading and sign language should be provided. The environment should be designed to avoid reflection and glare, and it should be possible to adjust both natural and artificial light.

h) Lighting in Accessible Sanitary Facilities

The minimum illumination measured at 800 mm above floor level shall be 200 lux in the area of the washbasin.

i) Lighting of Signages & Information Displays

Signages should be well illuminated with a glare free and uniform lighting between 100-300 Lux over the surface of the signage. Minimum acceptable level of lighting for directional signage, maps and text panel shall be 200 lux. Enough measures shall be taken to avoid glare on the screen of information displays to avoid discomfort to the people using them either by orientation of the lighting source or by using suitable shading devices.

15.3 Electrical Controls

All electrical controls such as switches, push buttons, intercoms etc. shall be located at an accessible height for reaching and operating, between 800 mm and 1 100 mm above floor level. As an exception, electrical wall socket outlets, telephone points and TV sockets can be located at a minimum height of 400 mm above floor level. For persons with reduced dexterity or impaired vision, electrical switches should have large push plates. Light switches should be either fixed inside all accessible toilet cubicles or the light should automatically switch on when someone enters the room.

CHAPTER. 16 Emergency Evacuation in Buildings

16.1 Scope

For barrier free physical environment, lighting and electrical controls are covered in this chapter.

16.2 Alarm Panels

- Placement (accessibility) and visibility of alerting devices is very important.
- Fire alarm boxes, emergency call buttons and lighted panels should be installed between heights of 800mm and 1000 mm from the finished floor surface.
- These should be adequately contrast in colour and tone from the background wall and should be labelled with raised letters and also in Braille.

16.3 Alert Systems

In emergency situations, it is critical that people are quickly alerted to the situation at hand, for differently abled person the following needs to be considered:

- Audible alarms with "Voice Instructions" should be installed that can help guide them to the nearest emergency exit. As an alternative to the pre-recorded messages, these alarms may be connected to central control room for on-the spot broadcasts.
- Non – auditory alarms (visual or sensory) to alert persons with hearing impairments should be installed at visible locations in all areas that the building users may visit (including toilet areas, storerooms etc.). Non-auditory alarms include flashing beacons.

16.4 Evacuation Plans

- Evacuation plans that clearly indicate the designated emergency evacuation routes as well as location of refuge areas should be displayed at all public areas of the building.
- These should contrast strongly against the background. Where possible, these should incorporate raised letters and tactile routes, and Braille for benefit of persons with visual impairments.

16.5 Emergency Evacuation Routes

In buildings or facilities, or portions of buildings or facilities, required to be accessible, accessible means of egress shall be provided in the same number as required for exits by local building/fire safety regulations.

- Designating evacuation routes shall be at least 1500 mm wide, to ensure a wheelchair user and an able-bodied person are able to pass each other along the route. The route should be

free of any steps or sudden changes in level and should be kept free from obstacles such as bins and flower pots etc.

- An exit stairway to be considered part of an accessible means of egress shall have a minimum clear width of 1500 mm between handrails and shall either incorporate an area of refuge within an enlarged floor-level landing or a horizontal exit.

- Orientation and direction signs should be installed frequently along the evacuation route and these should preferably be internally illuminated.

- Whilst the emergency lighting provided by traditional overhead emergency lighting luminaries, conforming to the Indian Standard IS: 9583-1981: Emergency Lighting Units, is acceptable for people who are visually impaired.

- Exit signs shall be in accordance with IS: 4878-1968. Exit signage should also be available in tactile format in the evacuation route.

- Along the emergency route, tactile floor guidance for persons with visual impairments should be provided.

Note: Fireproof doors along circulation paths that are not exclusively egress routes generally require a force greater than 25 N to operate, rendering several differently abled people dependent on others to negotiate these doors. While it is essential to cater safety measures for unpredictable emergencies, it is also important to provide an accessible environment to differently abled persons. Consider holding the doors open with magnetic catches or "floor springs" that are connected with the fire alarm system

16.6 Provision of refuge Areas

A refuge area, also known as an area of rescue assistance, is a place of relative safety where persons who may not be able to negotiate inaccessible egress routes may await rescue assistance.

- Where the required exit from an occupied level above or below a level of accessible exit discharge is not accessible, refuge areas shall be provided on each such level (in a number equal to that of inaccessible required exits).
- Every required area of refuge is to be accessible from the space it serves by an accessible egress route.
- Every area of refuge shall have direct access to an exit stairway.
- Each area of refuge must be separated from the remainder of the story by a smoke barrier having minimally one-hour fire resistance rating. Each area of refuge is to be designed to minimize the intrusion of smoke.
- The size of the refuge to provide at least two accessible areas each being not less 750 mm by 1200 mm. The area of rescue assistance shall not encroach on any required exit width. The total number of such areas per story shall be not less than one for every 200 persons of calculated occupant load served by the area of rescue assistance.

- All stairs next to the refuge should have a clear width of 1500mm between the handrails.

CHAPTER. 17 Colours

17.1 Scope

In order to facilitate orientation and to ensure safe use of an environment, adjacent surfaces, information and potential hazards shall provide a discernible visual contrast. A minimum difference in LRV (Light Reflectance Value) shall be provided in relation to the visual task in accordance with Table.

Table 17.1 Minimum Difference in LRV According to the Visual Task

Sl No. (1)	Visual Task (2)	Difference on the LRV Scale (3)	Approximate Examples of Colour Contrasting (4)
i)	Large surface areas (that is, walls, floors, doors, ceiling), elements and components to facilitate orientation (that is, handrails, switches and controls, tactile walking surface indicators, and visual indicators on glazed areas)	≥30 points	
ii)	Potential hazards and self contrasting markings (that is, visual indicator on steps) and text information (that is, signage)	≥70 points	 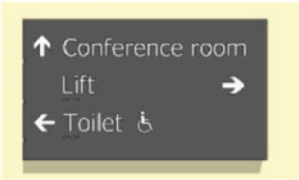

NOTES

1. The LRV, sometimes also called the luminance reflectance value, or CIE Y value, is expressed on a scale of 0-100, with a value of 0 points for pure black and a value of 100 points for pure white.
2. The perception of visual contrast increases with better lighting conditions.
3. Reflections and glare from shiny surfaces can reduce visual contrast and can confuse people with vision impairments.

Additionally, one of the two surfaces should have an LRV value of minimum 30 points for door furniture, 40 points for large area surfaces and 70 points for potential hazards and text information. The minimum difference in the LRV shall be achieved and maintained throughout the life of the building elements. Deterioration and maintenance shall be considered at installation. For lighting conditions lower than specified in this Code, the difference in LRVs should be higher.

For door hardware (that is, the elements and components to facilitate opening and closing doors) a difference in LRV between the product and its background of at least 15 points and a minimum light reflectance value of 30 points for one of the two surfaces is acceptable.

NOTE — Door hardware is normally positioned at the same height on a door and is either on the left or right side. This makes the location of door hardware easier than other features. In addition, the three-dimensional features of door hardware create shadows and bright spots, which further enhance their location.
Floor patterns should have a visual contrast of less than 20 points difference on the LRV scale.

NOTE — Highly contrasted floor patterns can be perceived as differences in floor level, which may confuse people with vision impairments or cognition capacity. Highly contrasted floor patterns may trigger an attack of vertigo.

17.2 Choice of Colour and Pattern

Different colours should be used for identification of doors, different storeys or departments in a building to aid persons with impaired cognitive ability. The colours used to facilitate orientation shall also provide minimum difference in LRV according to Table 17.1.

- Combinations of red tones and green tones should be avoided.
- Different storeys should be marked with clearly defined large numbers relating to the floor (that is, '2' for the second floor, and so on) both in the stairwells to assist those evacuating and at the lift and stair lobbies on each level.
  NOTE — Colour coding floors may not be practical from a long-term maintenance perspective
- In case of signage and graphical symbols, contrasting colours shall be used to differentiate the figures from the background on the signboard. The colours of signboard shall also contrast with the surrounding surface so as to be clearly distinguishable. Information from signs may be conveyed by the colour and brightness differentials between the letter and the background. For graphical symbols, it is preferable to use blue and white colours. Colours same as safety signs shall be avoided in other signs. Primarily red, yellow or green colour is used for safety signs. The colour combinations red/green and yellow/blue should not be used in order to avoid confusing persons who are colour blind. Use of the shades of the same colour in the sign and also use of more than 5 colours in a signage should be avoided. A preferred schedule of colour contrast for signs from their background is given in Table 17.2.

Table 17.2 Color Contrast

Background	Surface of Sign board	Sign text/symbol on Legend
Brick or dark stone	White	Black/dark green /dark blue
Light brick or light stone	Black / dark	White / yellow
Whitewashed wall	Black / dark	White / yellow
Green vegetation	White	Black / dark blue / dark green
Back-lit sign	Black	White or yellow

17.3 Luminous Contrast for various surfaces

The following luminous contrast should be followed for better accessibility provisions:

- Tactile warning strip should have a minimum luminous contrast of 70% with the adjoining surfaces.
- Treads and walls of a staircase shall be in contrasting colours.
- The provision of Braille and high luminous contrast signs is recommended. For persons with visual impairment, high luminous contrast, larger font, more prominent and well-defined shape of sign/signage is recommended.
- Handrail should have a minimum luminous contrast of 30% with the surrounding wall surfaces.
- A minimum luminous contrast of 30% should clearly define between wall, floor and door surfaces. Refer Table 17.3.
- Door handle of manually operated doors and control switch or button of door with powered open devices should have a minimum luminous contrast of 30% with the background finishes.
- Luminous contrast of not less than 70% should be provided to differentiate the international symbol of accessibility from the background, either light-on-dark or dark-onlight. The commonly employed colours are white for the wheelchair figure and blue for the background.
- Light switches and socket outlets should have a minimum luminous contrast of 30% with their background to indicate their locations.

Table 17.3 Luminous Contrast

Surface	Luminous Contrast with adjoining surface
Tactile warning strip	70%
Handrail	30%
Door Hardware	30%
Signages	70%
Light switches and socket outlets	30%

CHAPTER. 18 Orientation & Information: Signage & Graphical Symbols

18.1 Scope

To facilitate orientation mainly for the differently abled, built environment should be designed, constructed and managed as easy to access. One should be able to find one's own way without asking for any help, and be able to know when one has reached his destination without facing any obstacle. In order to achieve this, suitable provisions should be made at the entrance to the building and decision points within the building to describe the location and nature of building.

Supportive measures are mainly provided for people with sensory impairments according to the principle of 2 senses:

a) Audible /tactile information for people with vision impairments
b) Visual information for people with hearing impairments.

a) Design Parameters to achieve satisfactory orientation conditions includes:

- Planning Layouts
- Way finding and guided paths with TGSI (as given in this annex), other physical support of information
- Signage and symbols
- Visual contrast
- Choice of colours
- Avoiding surfaces which might make orientation more difficult;
- Lighting
- Visual, audible and tactile information according to the two-sense principle

Information should be clear, concise, accurate, timely and with suitable amplification and acoustic conditions so that it is legible and easily understood. Information should be complete but concise.

18.2 Signage and Graphical Symbols

a) General

- All types of signs should be visible, clear, simple, easy to read and understand, and properly illuminated at night. Information with text will be supplemented with graphical symbols to facilitate comprehension.
- The signs should be made of robust materials and be easy to change, clean and repair and not placed behind glass because of possible reflection, also an excessive quantity of signs in close proximity shall be avoided as well as visual material placed too close to wall fixed signs. As signage placed on the pedestrian path of travel is considered obstructions, they shall be detectable.

The main types of signs are:

a) Orientation signs. - Sketches, plans, models, etc.
b) Directional signs. - Directional information from point A to B.
c) Functional signs. - Explanatory information.
d) Informative signs. - Purely informative, for example a name.
e) Signs for emergency exits

18.3 International symbol of accessibility

(Refer Figure 18.1, Figure 18.2 & Figure 18.3)

Accessible spaces and facilities should be identified by the international symbol of accessibility and provided in new as well as in existing building. The symbol is composed of a wheelchair figure with either a square background or a square border. Contrasting colours should be used to differentiate the figure from the background. The commonly employed colours are white for the figure and blue for the background. The wheelchair figure should always be seen from drawn facing right. For completely accessible buildings, it is enough to have one explanatory sign at the entrance.

105A PROPORTIONS

105B DISPLAY CONDITIONS

NOTE — This graphical symbol also indicate full accessibility or accessible toilets.

Sloped OR Ramped Access

Toilets Accessible, Female AND Male

ACCESSIBILITY, BLIND OR LOW VISION

Figure 18.2 International Symbol of Accessibility

TOILETS ACCESSIBLE MALE

TOILETS ACCESSIBLE FEMALE

Figure 18.3 International Symbol of Accessibility

18.4 Direction signs

Graphic or written directions should be used to clearly indicate the type and location of the available facility. They should not be excessive in number, but placed at main entrances and doors and in places where changes in direction or level occur in existing as well as new buildings.

a) General

- Directional and functional signs should be located below 1 600 mm so that it is easy to approach, to touch and read the raised signs with the fingers.
- Signs should be located where they are clearly visible to people who are seated, standing or walking.
- Signs should be placed between 1 200 mm and 1 600 mm (Refer Figure 18.4) from the floor or ground surface.
- It shall be possible to approach the sign and shall be legible from a short distance
- Where there is sufficient space, door signs shall be located on the latch side of the door within 50 mm to 100 mm of the architrave

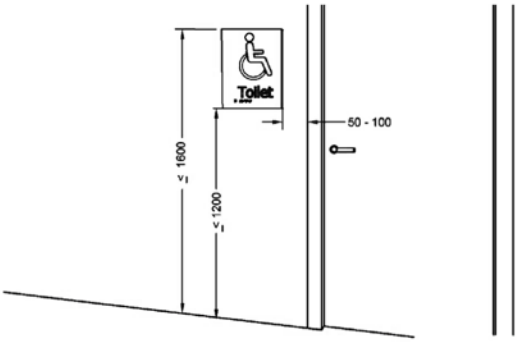

Figure 18.4 DOOR SIGNS

b) Placement of Signs outside the Building

- Informative signs shall be located adjacent to the entrance door and be illuminated and clearly visible.
- The sign shall be placed on the latch side.

- Communication systems shall also be placed on the latch side and preferably in a range of 1 000 mm to 1 200 mm above ground level.
- Fixed signs indicating street names shall be placed at a maximum height of 2.50 m.
- Fixed signs indicating house numbers shall be placed at a maximum height of 2.00 m.
- Maps and information panels at building entrances, along roads, and on public buildings shall be placed at a height between 0.90 m and 1.80 m.

c) Placement of Signs inside the Building

- Orientation signs should be located in accessible places adjacent to, but not directly in, main access routes so that they can be examined without disturbance.
- In public buildings there should be an orientation plan immediately inside the main entrance.
- Directional signs should clearly direct people to the facilities. They should be located where directional decisions are made and constitute a logical orientation sequence from the starting point to different points of destination. They should be repeated, not too often, but every time there is a possibility of alteration in the traffic direction.
- Directional signage to washrooms should be provided in all parts of a precinct or building.
- Stairwells should have information signs identifying all points of entry and exit.
- Floor numbers shall be located on each floor at top and bottom of stairs, on handrails and on each side of the outer frame of each lift-car entrance on each floor and prominently displayed elsewhere so they are visible from the lift car at each level.

d) Placement of Signs for Toilet Facilities

- Tactile signs shall be used beside rather than on doors to indicate 'Ladies' or 'Gent'.
- If facilities are provided such as buttons or taps which operate by use of sensors, accessible signage shall be provided to explain the same.
- For the benefit of the persons with vision impairments, all general toilets shall have marked on plates with raised alphabets and Braille put on the wall next to the door latch, preferably on the left side. An additional signage shall also be provided on the door at 1 500 mm height.

e) Placement of Signages for Accessible Parking

Directional signage shall indicate the way to designated accessible parking and its provision. The symbol shall be clearly marked/ painted on the floor surface in the centre of 1000-1500mm side square and in contrasting colour of blue and white at the designated accessible parking lot. (Refer Figure 18.5)

- Directional signs consisting of arrows combined with the international symbol of accessibility shall be placed along the route leading to the accessible parking lot
- Signage Shall be placed where there is a change of direction, or where the location of the accessible parking lot is not obvious or is distant from the approach viewpoints
- A vertical sign shall be provided, and to make it easily visible, the sign shall be at a minimum height of 2 100 mm.

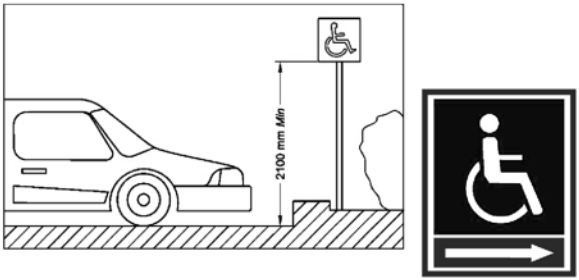

Figure 18.5. Signage for Designated Accessible Parking Spaces

18.5 Surface

The sign surface should be processed to prevent glare. Engraved texts should be avoided unless they are coloured. Relief prints are advisable. Key plans, orientation signs and push buttons in lifts must have a text in Braille or in relief.

18.6 Installation

Signs can be wall-mounted, suspended or pole-mounted.

a) Wall-Mounted signs:

Wall-mounted signs, such as those indicating room numbers, should be placed with the centre line at a height between 1.40 m and 1.60 m from the finished floor level.

b) Overhanging signs:

Overhanging signs should allow a minimum clearance of 2.00 m.

c) Pole-Mounted signs:

Fixed poles should have contrasting durable colour marking strips of at least 0.30 m in length, placed with the centre line at a height between 1.40 m and 1.60 m, to warn pedestrians with limited vision.

18.7 Colour

The colour of signs should contrast with the surrounding surface so as to be clearly distinguishable. The commonly used colours are: white, black, yellow, red, blue and green. The colour combinations red/green and yellow/blue should not be used in order to avoid confusing colour- blind persons.

18.8 Lettering

- The size of letters should be in proportion to the reading distance. (Refer Figure 18.6)
- Character width-to-height ratio should be between 3:5 and 1:1 and the character stroke width-to-height ratio should be between 1:5 and 1:10.
- The letters and signs should preferably be raised at least 1 mm from the background, to enable sightless people to read the information using the tips of their fingers. (Refer Figure 18.7)
- The smallest letter type should not be less than 15 mm.
- Nominal spacing between words and letters should be used.

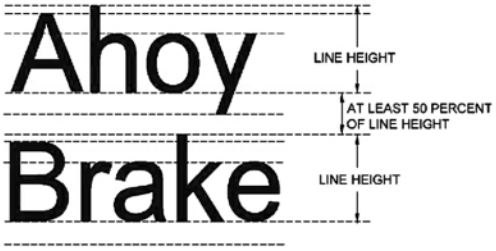

LINE HEIGHT AND SPACING

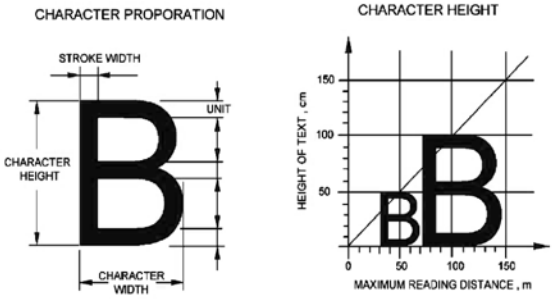

Figure 18.6 Lettering of Signage

Key

1 Raised tactile letters and graphical symbols, height 15 mm to 55 mm, minimum relief 0.8 mm (1 mm to 1.5 mm relief is preferred)

2 Braille text

3 Braille Locator

Figure 18.7 Example of Raised Tactile Signs

CHAPTER. 19 Operating Controls and Devices

19.1 Scope-

The design and construction of operating controls and devices shall be such as to enable everyone to be operated safely and independently. this chapter deals with operating control and devices including door handles & its locks, lever, mixer, taps, activation devices, window openers and locks, electric outlets and switches.

19.2 General

- The operable part of controls shall be located adjacent to the clear floor space. Controls shall be easy to use. All switches and controls shall be easy to understand without requiring specialist knowledge.

a) Location, Heights and Distances

- Devices, controls shall be installed between 800 mm and 1 100 mm above floor level and shall be located at a minimum of 600 mm with a preference of minimum 700 mm, from any internal corner. Reading meters shall be located between 1 200 mm and 1 400 mm from the floor. As an exception, electrical wall socket outlets, telephone points and TV sockets can be located at a minimum height of 400 mm above floor level. (Refer Figure 19.1)

b) Identification

- Buttons and devices shall be identified by visual contrast. Information shall be in raised tactile and Braille signage. All the important controls shall be having an integral Braille indication.

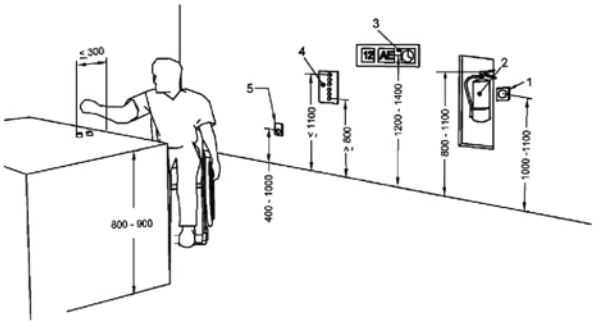

Key
1 Fire alarm, call point
2 Fire extinguisher
3 Meter indicators
4 Control devices
5 Socket outlets

Figure 19.1 Height of switches, socket outlet, reading control and controls on a horizontal surface

CHAPTER. 20 Accoustic Environment

20.1 Scope

The Built environment should be suitable for use including specially challenged persons with hearing impairment. Hearing impairment makes discerning sounds and words arduous in a noisy environment. Sound insulation and maintaining low reverberation times becomes important both in minimising noise in the built environment as well as while designing the size and shape of the room.

20.2 Assistive Listening Devices

Assistive Listening Devices should be provided in areas where any form of audible communication is taking place. Assistive listening systems are generally categorized by their mode of transmission. There are hard-wired systems and three types of wireless systems:

- Direct wire system
- Induction loop
- infrared, and
- FM radio transmission.

NOTE: Assistive listening systems are not required where audio amplification is not provided.

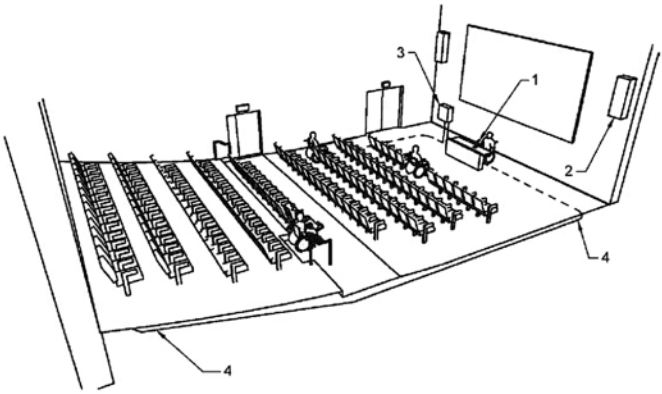

Key
1 Microphone
2 Loudspeakers
3 Induction loop amplifier
4 Induction loop

Figure 20.1 Example of induction loop system in conference rooms

a) Use of Induction loops and infra red transmission

Incase a person uses hearing aids, induction loops will be required in the following areas:

- Very noisy information counters or where announcements are made.
- Areas where verbal inputs provided, such as conference halls, auditoria, class rooms and cinema halls.

All seats, including the front scene, should be covered by hearing enhancement systems like induction loops. Portable hearing enhancement systems can be an alternative.

b) Receivers

Receivers should be provided for assistive listening systems in each assembly area in compliance with the following:

Table 20.1 Number of Receivers Required

Capacity of Seating in Assembly Area	Minimum Number of Required Receivers	Minimum Number of Required Receivers Required to be Hearing-aid Compatible
50 or less	2	2
51 to 200	2, plus 1 per 25 seats over 50 seats1	2
201 to 500	2, plus 1 per 25 seats over 50 seats1	1 per 4 receivers1
501 to 1000	20, plus 1 per 33 seats over 500 seats1	1 per 4 receivers1
1001 to 2000	35, plus 1 per 50 seats over 1000 seats1	1 per 4 receivers1
2001 and over	55 plus 1 per 100 seats over 2000 seats1	1 per 4 receivers1

A minimum of twenty-five percent receivers should be provided, but no fewer than two should be hearing-aid compatible.

EXCEPTIONS: 1. When more than one assembly areas are under one management to provide assistive listening systems, total number of required receivers shall be allowed to be calculated according to the total number of seats in the assembly areas in the building provided that all receivers are usable with all systems.

1. When all the seats in an assembly area are provided with induction loops minimum number of receivers as mentioned in Table 15.1 is not required to be provided.

c) Receiver Jacks

The Receivers which are used with an assistive listening system should include a 3.2 mm standard mono jack.

d) Receiver Hearing Aid Compatibility

The receivers should be compatible with hearing aids.They should have an interface with telecoils through the provision of neckloops.

e) Sound Pressure Level

Assistive listening systems should have a capacity of maximum 118dB and a minimum of 110dB. They should have a dynamic range on the volume control of 50dB.

f) Signal to Noise ratio

All assistive listening systems should have a minimum signal to noise ration of 18dB.

g) Peak Clipping Level

Peak clipping should not exceed 18 dB of clipping relative to the peaks of speech.

20.3 Audible Alarms

Audible emergency alarms should produce a sound that exceeds the prevailing equivalent sound level in the space by at least 15 dbA or exceeds any maximum sound level with duration of 60 seconds by 5 dbA, whichever is louder. Sound levels for alarm signals shall not exceed 120 dbA.

NOTE:

Schools for the visually impaired and hearing impaired require a different approach.

- Hearing aids neither function in high noise levels nor in reverberant conditions.
- Children with visual impairment rely mainly on their hearing skills for comprehension of verbal communication and change in the environment.
- These schools will function better under low noise levels and short reverberation times.
- For empty classrooms in schools for the visually impaired reverberation times should be limited to 1.0 s and in case of schools for the hearing impaired reverberation time should be limited to 0.5 s.

References

- 2016, Bureau of Indian Standards, National Building Code, 2016
- 2016, *Harmonised Guidelines and Space Standards for Barrier-Free Built Environment for Persons with Disability and Elderly Persons*', Minister Of Urban Development
- 2014, Handbook on Barrier Free and Accessibility, CPWD
- Guidelines and Space Standards for Barrier Free Built Environment for Disabled and Elderly Persons, 1998, CPWD
- National Disability Authority. (1998). *Buildings for Everyone.* National Rehabilitation Board.
- Manual on Barrier Free Environment, O/o the Chief Commissioner for Persons with Disabilities, 2002
- UNCRPD. (2008). *http://www.icrpd.net/implementation/en/index.htm*. Retrieved
- ADA Accessibility Guidelines for Buildings and Facilities (ADAAG) US: American Disabilities Act.

ANNEXURE A

PART OF THE ACT RELATED TO CONSTRUCTION ACTIVITIES

MINISTRY OF LAW AND JUSTICE

(Legislative Department)

New Delhi, the 28th December, 2016/Pausha 17, 1938 (Saka)

The following Act of Parliament received the assent of the President on the 27th December, 2016, and is hereby published for general information:—

THE RIGHTS OF PERSONS WITH DISABILITIES ACT, 2016

(NO. 49 OF 2016)

[27th December, 2016]

An Act to give effect to the United Nations Convention on the Rights of Persons with Disabilities and for matters connected therewith or incidental thereto.

WHEREAS the United Nations General Assembly adopted its Convention on the Rights of Persons with Disabilities on the 13th day of December, 2006;

AND WHEREAS the aforesaid Convention lays down the following principles for empowerment of persons with disabilities,—

(a) Respect for inherent dignity, individual autonomy including the freedom to make one's own choices, and independence of persons;

(b) Non-discrimination;

(c) Full and effective participation and inclusion in society;

(d) Respect for difference and acceptance of persons with disabilities as part of human diversity and humanity;

(e) Equality of opportunity;

(f) Accessibility;

(g) Equality between men and women;

(h) Respect for the evolving capacities of children with disabilities and respect for the right of children with disabilities to preserve their identities;

CHAPTER I

Preliminary

2.(w) "public building" means a Government or private building, used or accessed by the public at large, including a building used for educational or vocational purposes, workplace, commercial, activities, public utilities, religious, cultural, leisure or recreational activities, medical or health services, low enforcement agencies, reformatories or judicial foras, railway stations or platforms, roadways, but stands or terminus, airports or water ways;

(x) " public facilities and services' includes all forms of delivery of services to the public at large, including housing, educational and vocational trainings, employment and career advancement, shopping or marketing, religious, cultural, leisure or recreational, medical health and rehabilitations, banking, finance and insurance, communication, postal and information, access to justice, public utilities, transportation;

(y) "reasonable accommodation" means necessary and appropriate modification and adjustment,

without imposing a disproportionate or undue burden in a particular case, to ensure to persons with disabilities the enjoyment or exercise of rights equally.

(zd) "transportation systems" includes road transport, rail transport, air transport, water transport, para transit system for the last mile connectivity, road and street infrastructure etc;

(ze) "universal design" means the design of products, environments, programmes and services to be usable by the people to the greatest extent possible, without the need for adaptation or specialized design and shall apply to assistive devices including advance technologies for particular group of persons with disabilities.

CHAPTER V

Social security, health rehabilitation and recreation

24. 1(e) access to safe drinking water and appropriate and accessible sanitation facilities especially in urban slums and rural areas;

25 1(b**)** barrier-free access in all parts of Government and private hospital and other healthcare institutions and centres;
2(b) promote various methods for preventing disabilities;

29 (g) developing technology, assistive devices and equipments to facilitate access and inclusion for persons with disabilities in recreational activities;

30 3(b) redesign and support infrastructure facilities of all sporting activities for persons with disabilities.
(d) provide multi-sensory essentials and features in all sporting activities to ensure effective participation of all persons with disabilities;

CHAPTER VIII

Duties and Responsibilities of Appropriate Governments

40. The Central Government shall, in consultation with the Chief Commissioner, formulate rules for persons with disabilities laying down the standards of accessibility for the physical environment, transportation, information and communications, including appropriate technologies and systems, and other facilities and services provided to the public in urban and rural areas.

41. (1) The appropriate Government shall take suitable measures to provide,

- facilities for persons with disabilities at bus stops, railway stations and airports conforming to the accessibility standards relating to parking spaces, toilets, ticketing counters and ticketing machines;

- access to all modes of transport that conform the design standards, including retrofitting old modes of transport, wherever technically feasible and safe for persons with disabilities, economically viable and without entailing major structural changes in design;

- accessible roads to address mobility necessary for persons with disabilities.

(2) The appropriate Government shall develop schemes programmes to promote the personal mobility of persons with disabilities at affordable cost to provide for-

(a) incentives and concessions;
(b) retrofitting of vehicles; and
(c) personal mobility assistance.

42. The appropriate Government shall take measures to ensure that,—

(i) all contents available in audio, print and electronic media are in accessible format;

(ii) persons with disabilities have access to electronic media by providing audio description, sign language interpretation and close captioning;

(iii) electronic goods and equipment which are meant for everyday use are available in universal design.

43. The appropriate Government shall take measures to promote development, production and distribution of universally designed consumer products and accessories for general use for persons with disabilities.

44. (1) No establishment shall be granted permission to build any structure if the building plan does not adhere to the rules formulated by the Central Government under section 40.

(2) No establishment shall be issued a certificate of completion or allowed to take occupation of a building unless it has adhered to the rules formulated by the Central Government.

45. (1) All existing public buildings shall be made accessible in accordance with the rules formulated by the Central Government within a period not exceeding five years from the date of notification of such rules:

Provided that the Central Government may grant extension of time to the States on a case to case basis for adherence to this provision depending on their state of preparedness and other related parameters.

(2) The appropriate Government and the local authorities shall formulate and publish an action plan based on prioritisation, for providing accessibility in all their buildings and spaces providing essential services such as all primary health centres, civil hospitals, schools, railway stations and bus stops.

46. The service providers whether government or private shall provide services in accordance with the rules on accessibility formulated by the Central Government under section 40 within a period of two years from the date of notification of such rules;

Provided that the Central Government in consultation with the Chief Commissioner may grant extension of time for providing certain category of services in accordance with the said rules.

48. The appropriate government shall undertake social audit of all general schemes and programmes involving the persons with disabilities to ensure that the scheme and programmes do not have an adverse impact upon the persons with disabilities and need the requirement and concerns of persons with disabilities.